A SET OF AS-BUILT WATERLINE PLANS FOR
EL TIO PEPE MEXICAN RESTAURANT

FOUR TRACTS OF LAND BEING PART OF THE SOUTHEAST QUARTER OF THE NORTHEAST QUARTER OF SECTION 29, TOWNSHIP 47 NORTH, RANGE 3 EAST OF THE FIFTH PRINCIPAL MERIDIAN,
CITY OF O'FALLON, ST. CHARLES COUNTY, MISSOURI

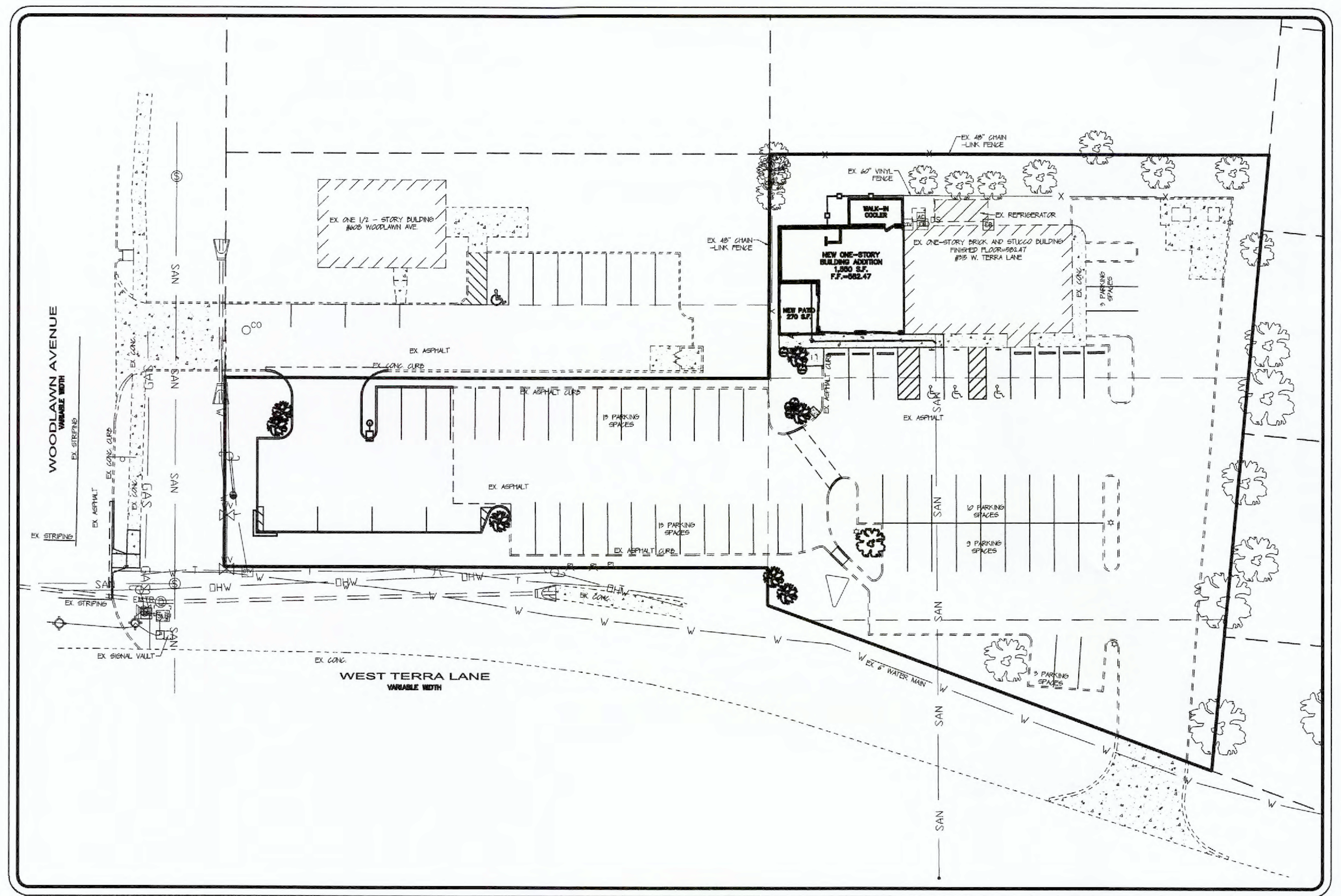

Plan View
1"=40'

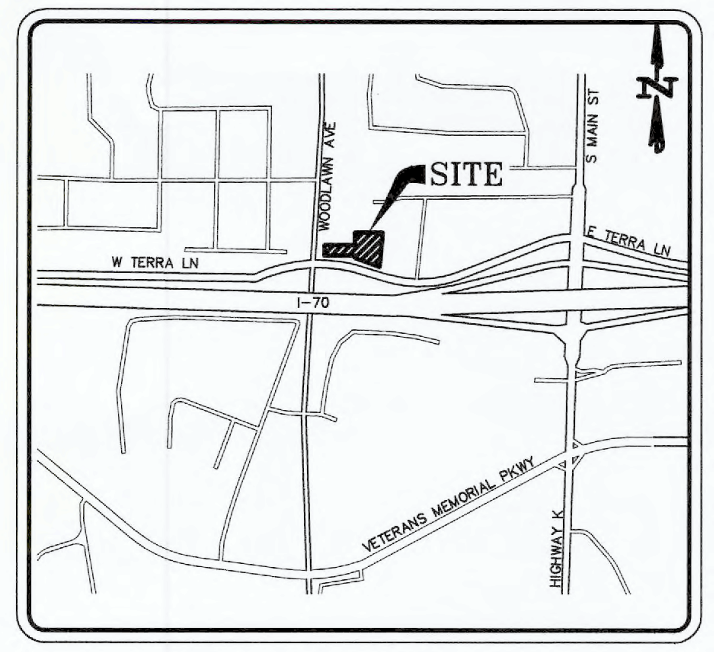

Locator Map
NOT TO SCALE

Drawing Index

1 COVER SHEET
2 COMMERCIAL NOTES
3 DEMOLITION PLAN
4 FLAT PLAN
5 GRADING PLAN
6 PRE-DEVELOPED DRAINAGE AREA MAP
7 POST DEVELOPED DRAINAGE AREA MAP
8 EROSION CONTROL DETAILS
9 STORM SEWER DETAILS
10 WATER SERVICE DETAILS
11 WATER SERVICE DETAILS
12 PAVEMENT DETAILS
13 ROADWAY, SIDEWALK AND SIGN DETAILS
14 CONSTRUCTION DETAILS
15 ENTRANCE DETAILS
16 SWPPP
17 LANDSCAPE PLAN
18 PHOTOMETRIC PLAN

Benchmarks

Project

BENCHMARK:

F-149 – ELEVATION 542.80 (DATUM NAVD88) ESTABLISHED BY COAST AND GEODETIC SURVEY 1935, A STANDARD BRASS DISK, STAMPED F 149 1935 AND SET IN THE TOP OF A CONCRETE POST PROJECTING 3 INCHES ABOVE GROUND. FURTHER DESCRIBED IN 2003 AS BEING LOCATED IN THE CITY OF O FALLON, MO. APPROXIMATELY 12 MILES WEST OF THE CITY OF SAINT CHARLES AND 7.5 MI EAST OF WENTZVILLE AND IN FRONT OF THE CITY OF O FALLON MUNICIPAL CENTER. TO REACH THE STATION FROM THE INTERSECTION OF THE I-70 BRIDGE OVER CR-K/SR-M (MAIN STREET), GO NORTH 0.6 MI ON MAIN STREET TO THE STATION ON THE RIGHT AT THE SOUTHEAST CORNER OF THE ENTRANCE TO THE CITY OF O FALLON MUNICIPAL BUILDING. THE STATION IS A STANDARD CGS DISK STAMPED--F 149 1935--AND SET IN A 4-INCH SQUARE CONCRETE MONUMENT PROJECTING 3 INCHES ABOVE THE GROUND. THE STATION IS 78.4 FEET SOUTH OF THE BRICK CITY OF O FALLON MUNICIPAL BUILDING ENTRANCE SIGN, 61.2 FEET SOUTHWEST OF A STOP SIGN, 45.0 FEET NORTH OF THE NORTH RAIL OF THE NORFOLK AND SOUTHERN RAILROAD TRACKS, 28.6 FEET SOUTHWEST OF A LIGHT STANDARD, AND 25.7 FEET NORTHEAST OF A LIGHT STANDARD

Site Benchmark

BENCHMARK:

ELEV. 598.80' – CROSS CUT ON NORTHEAST CORNER OF CONCRETE PAD AT THE BASE OF THE STREET LIGHT BOX AT THE NORTHEAST CORNER OF WOODLAWN AVENUE AND WEST TERRA LANE.

Utilities

Sanitary Sewer
City of O'Fallon
100 N. Main St.
O'Fallon, MO 63366
636-281-2858

Water
City of O'Fallon
100 N. Main St.
O'Fallon, MO 63366
636-281-2858

Electric
Ameren UE
200 Callahan Road
Wentzville, MO 63385
636-639-8312

Gas
Laclede Gas Company
1999 Trade Center Drive
St. Peters, MO 63376
636-575-0885

Telephone
Century Link
1151 Century Tel Dr.
Wentzville, MO. 63385
636-332-7261

Fire Department
City of O'Fallon
100 N. Main St.
O'Fallon, MO 63366
636-272-3493

Cable
Charter Communications
4160 Old Mill Parkway
St. Peters, MO. 63376
636-387-6633

Storm Sewer
City of O'Fallon
100 N. Main St.
O'Fallon, MO 63366
636-281-2858

For city water, sanitary, and storm locates contact 636-281-2858.

For traffic locates contact 636-379-5602.

Contact Engineering at 636-379-5556.

Construction Inspection Division at 636-379-5596.

LEGEND

PP	UTILITY POLE
	GUY WIRE
	LIGHT STANDARD
	ELEC. YARD LIGHT
GM	GAS METER
GV	GAS VALVE
	FIRE HYDRANT
WM	WATER METER
	DOWNSPOUT
(S)	MANHOLE
C.O.	CLEAN-OUT
(R. & S.)	RECORD and SURVEYED
D.B.	DEED BOOK
PG.	PAGE
N/F	NOW OR FORMERLY
—T—	TELEPHONE LINE
—G—	GAS LINE MARK
—E—	UNDERGROUND ELEC.
—OU—	OVERHEAD UTILITY
—W—	WATERLINE
12"	TREE WITH SIZE
(W)	WATER MANHOLE
WSO	WATER SHUTOFF VALVE
BH	BORE HOLE LOCATION
	LIGHT STANDARD
	AREA INLET
(TBR)	TO BE REMOVED

Site Notes

- CITY OF O'FALLON CONSTRUCTION WORK HOURS PER CITY ORDINANCE 3429 AS SHOWN IN SECTION 500.420 OF THE MUNICIPAL CODE OF THE CITY OF O'FALLON ARE AS FOLLOWS:

  OCTOBER 1 THROUGH MAY 31
  7:00 A.M. TO 7:00 P.M. MONDAY THROUGH SUNDAY

  JUNE 1 THROUGH SEPTEMBER 30
  6:00 A.M. TO 8:00 P.M. MONDAY THROUGH FRIDAY
  7:00 A.M. TO 8:00 P.M. SATURDAY AND SUNDAY

- TOTAL SITE AREA 1.11 ACRES
  THE AREA OF LAND DISTURBANCE IS 0.22 ACRES
  NUMBER OF PROPOSED LOTS IS 1

- BUILDING SETBACK INFORMATION: FRONT YARD.... .....25 FEET
  SIDE YARD.... ....0 FEET
  REAR YARD.... ....0 FEET

- PARKING REQUIREMENTS:
  RESTAURANTS (DINE-IN AND DRIVE-THRU):
  TWENTY (20) SPACES PLUS ONE (1) SPACE PER 100 S.F. OF FLOOR AREA INCLUDING OUTDOOR PATIO SPACE = 4300/100 ~ 43 + 20 = 63 SPACES REQUIRED

  PROPOSED = 3 ACCESSIBLE SPACES
  65 OPEN SPACES
  68 SPACES TOTAL PROVIDED

- LANDSCAPING REQUIREMENTS:
  STREET TREE REQUIREMENTS:
  1 TREE FOR EVERY 40' OF FRONTAGE (ADDITIONAL PARKING AREA ONLY)
  155' OF RIGHT-OF-WAY FRONTAGE = 155/40=3.875 ~ 4 STREET TREES REQUIRED
  4 STREET TREES PROVIDED
  INTERIOR LANDSCAPING REQUIRED:
  NOT LESS THAN 6% OF INTERIOR PARKING LOT SHALL BE LANDSCAPED.
  68 SPACES X 270 = 18,360 X 6% = 1,102 SQ.FT. LANDSCAPING REQUIRED
  1200 SQ.FT LANDSCAPING PROVIDED INCLUDING 2 TREES & 5 SHRUBS

CITY APPROVAL OF THE CONSTRUCTION SITE PLANS DOES NOT MEAN THAT ANY BUILDING CAN BE CONSTRUCTED ON THE LOTS WITHOUT MEETING THE BUILDING SETBACKS AS REQUIRED BY THE ZONING CODE.

ALL INSTALLATIONS AND CONSTRUCTION SHALL CONFORM TO THE APPROVED ENGINEERING DRAWINGS. HOWEVER, IF THE DEVELOPER CHOOSES TO MAKE MINOR MODIFICATIONS IN DESIGN AND/OR SPECIFICATIONS DURING CONSTRUCTION, COMPLETE INSTALLATION OR CONSTRUCTION. IT SHALL BE THE RESPONSIBILITY OF THE DEVELOPER TO NOTIFY THE CITY ENGINEER OF ANY CHANGES FROM THE APPROVED DRAWINGS. THE DEVELOPER MAY BE REQUIRED TO CORRECT THE INSTALLED IMPROVEMENT SO AS TO CONFORM TO THE APPROVED ENGINEERING DRAWING. THE DEVELOPER MAY REQUEST A LETTER FROM THE CONSTRUCTION INSPECTION DIVISION REGARDING ANY FIELD CHANGES APPROVED BY THE CITY INSPECTORS.

Conditions of Approval From Planning and Zoning and CUP

P&Z (33-14.01) SITE PLAN APPROVAL ON APRIL 6, 2017 WITH THE FOLLOWING CONDITIONS.

1. THE SOUTHWEST END OF THE PARKING LOT ADDITION SHALL BE STRIPED FOR PARALLEL PARKING OR CONFIGURED TO PREVENT PARKING IN THE AREA BEYOND THE 25 FOOT DRIVE AISLE.
2. ANY NEW ROOFTOP MECHANICAL UNITS SHALL BE SCREENED IN ACCORDANCE WITH CITY CODE.
3. THE CONSOLIDATION OF THE LOTS WILL REQUIRE A BOUNDARY ADJUSTMENT PLAT.
4. THE APPLICANT SHALL COMPLY WITH THE MUNICIPAL CODE REQUIREMENTS.\
5. THE CROSS ACCESS CONNECTION SHALL BE SHIFTED AS FAR WEST AS POSSIBLE AS REVIEWED AND APPROVED ON THE CONSTRUCTION SITE PLANS.

1. A PHOTOMETRIC LIGHTING PLAN SHALL BE PROVIDED.
2. PROVIDE THE DETAIL FOR THE PATIO FENCE.
3. THE COOLER SHALL BE COATED WITH EIFS OR STUCCO MATERIAL AND PAINTED TO MATCH THE BUILDING ON AREAS NOT COVERED BY THE SIX (6) FOOT VINYL FENCE.
4. PROVIDE BICYCLE PARKING AS REQUIRED BY CITY CODE SECTION 400.490.
5. ADA ACCESSIBLE SPACES SHALL BE A MINIMUM OF 9'x19' WITH A VAN ACCESSIBLE AISLE OF 96" AND A REGULAR ACCESS AISLE OF 60".
6. UPDATE THE EXISTING RAMP AT THE CORNER OF WOODLAWN AND TERRA TO CURRENT ADA STANDARDS.
7. PROVIDE THE DEED BOOK AND PAGE FOR THE CROSS ACCESS EASEMENT.
8. PROVIDE A 10' WIDE UTILITY EASEMENT BEHIND ALL RIGHT OF WAY.

CUP (33-14.01.01) CONDITIONAL USE PERMIT APPROVAL ON APRIL 6, 2017 WITH THE FOLLOWING CONDITIONS.

1. THE HOLDER OF THIS CONDITIONAL USE PERMIT SHALL BE AND REMAIN FULLY LICENSED WITH THE STATE OF MISSOURI AND THE CITY OF O'FALLON. BOTH LICENSES SHALL REMAIN IN GOOD STANDING THROUGHOUT THE TERM OF THIS CONDITIONAL USE PERMIT.
2. THIS CONDITIONAL USE PERMIT IS GRANTED SOLELY TO THE OWNER OF EL TIO PEPE. SHOULD OWNERSHIP TRANSFER IN THE FUTURE, THE NEW OWNER SHALL BE REQUIRED TO APPLY FOR A TRANSFER OF A CONDITIONAL USE PERMIT THROUGH THE PLANNING AND DEVELOPMENT DEPARTMENT.
3. THE TRASH, GREASE AND RECYCLING RECEPTACLES SHALL BE LOCATED WITHIN THE ENCLOSURE AT ALL TIMES. THE GATES ON THE ENCLOSURE SHALL REMAIN CLOSED WHEN NOT IN USE.
4. SHOULD THE PETITIONER CHOOSE TO OFFER LIVE ENTERTAINMENT AS DEFINED IN CHAPTER 635 OF THE MUNICIPAL CODE, A CONDITIONAL USE PERMIT AND LIVE ENTERTAINMENT LICENSE WILL NEED TO BE APPROVED BY THE CITY COUNCIL.
5. THIS CONDITIONAL USE PERMIT SHALL BE REVOKED UPON: i) BREACH OR FAILURE TO COMPLY WITH THE CONDITIONS OF THIS PERMIT, ii) DISCIPLINARY ACTION OR OTHER ACTION AFFECTING THE STATUS OF THE HOLDER'S STATE OR CITY LICENSES, AND iii) AS OTHERWISE PROVIDED BY ORDINANCE OR OTHER APPLICABLE LAW.
6. THE OCCURRENCE OF ACTIVITIES WHICH ARE DEEMED TO DISTURB THE PEACE IS DEFINED IN TITLE II. PUBLIC HEALTH, SAFETY AND WELFARE OF THE MUNICIPAL CODE SHALL PROMPT THE CITY TO REVOKE THE CONDITIONAL USE PERMIT.
7. OUTDOOR STORAGE OF RESTAURANT RELATED EQUIPMENT SHALL BE PROHIBITED. EQUIPMENT INCLUDES, BUT IS NOT LIMITED TO SODA CANISTERS, BREAD RACKS, FLOOR MATS.
8. DURING BUSINESS HOURS ALL DOORS OF THE ESTABLISHMENT SHALL REMAIN CLOSED AT ALL TIMES.
9. SHOULD THE CONDITIONAL USE CEASE OPERATIONS FOR A PERIOD OF ONE (1) YEAR, THE CUP SHALL BE REVOKED.

Development Notes

1. AREA OF TRACT: 1.11 ACRES
2. PRESENT ZONING: C-2 (GENERAL BUSINESS)
3. PROPOSED USE: RESTAURANT
4. PROPERTY OWNER: JOSE & MARTHA JARA
   315 WEST TERRA LANE
   O'FALLON, MO 63366
5. SETBACKS FOR C-2 ZONING:
   FRONT YARD: 25 FEET
   SIDE YARD: 0 FEET
   REAR YARD: 0 FEET
6. WE HAVE DETERMINED THE HORIZONTAL LOCATION OF THIS TRACT OF LAND IN ST. CHARLES COUNTY, MISSOURI, BY SCALING THE PROPERTY IN REFERENCE TO THE FOLLOWING FLOOD INSURANCE RATE MAP (FIRM), ST. CHARLES COUNTY, MISSOURI AND INCORPORATED AREAS, MAP NUMBER 29183C0237G, COMMUNITY PANEL NUMBERS (CITY OF O'FALLON, ST. CHARLES COUNTY, 290316 0237 G WITH AN EFFECTIVE DATE OF JANUARY 20, 2016). BY EXPRESS REFERENCE TO THIS MAP AND ITS LEGEND, THIS TRACT OF LAND IS INDICATED TO BE WITHIN THE FOLLOWING ZONES:
   - ZONE X – AREAS DETERMINED TO BE OUTSIDE THE 0.2% ANNUAL CHANCE FLOODPLAIN

   THE EVALUATION PROVIDED IN THIS NOTE IS RESTRICTED TO SIMPLY INDICATING THE APPARENT HORIZONTAL LOCATION OF THE PROPERTY WITH RESPECT TO THE FEATURES DISPLAYED ON THE MAP. NO FIELD STUDY OF THE DRAINAGE CHARACTERISTICS TO WHICH THIS PROPERTY MAY BE SUBJECT TO HAS BEEN CONDUCTED AND NO REPRESENTATION CONCERNING THE INSURABILITY OF THIS PROPERTY OR THE POTENTIAL SUSCEPTIBILITY OF THIS PROPERTY TO FLOODING HAS BEEN MADE. BAX ENGINEERING MAKES NO REPRESENTATION CONCERNING THE ACCURACY OF THE ABOVE REFERENCED FIRM MAP WHICH INCLUDES A NOTE THAT "THIS MAP IS FOR USE IN ADMINISTERING THE NATIONAL FLOOD INSURANCE PROGRAM. IT DOES NOT NECESSARILY IDENTIFY ALL AREA SUBJECT TO FLOODING, PARTICULARLY FROM LOCAL DRAINAGE SOURCES OF SMALL SIZE.
7. SITE COVERAGE:
   EXISTING:
   TOTAL SITE ACREAGE – 48,219.36 SQ.FT.
   BUILDING AND PAVEMENT – 28,969.50 SQ.FT. = 60%
   GREEN SPACE – 19,249.86 SQ.FT. = 40%
   PROPOSED:
   BUILDING AND PAVEMENT – 34,512.79 SQ.FT. = 72%
   GREEN SPACE – 13,706.57 SQ.FT. = 28%
8. DIFFERENTIAL RUNOFF:
   EXISTING:
   BUILDING & PAVEMENT 0.67 ACRES @ 3.85 = 2.58 cfs
   GREEN SPACE 0.44 ACRES @ 1.87 = 0.82 cfs
   TOTAL EXISTING = 3.40 cfs
   100 year – 20 min 0.67 ACRES @ 6.08 = 4.07 cfs
   0.44 ACRES @ 2.95 = 1.30 cfs
   100 year 20 min TOTAL = 5.37 cfs
   PROPOSED:
   BUILDING & PAVEMENT 0.79 ACRES @ 3.85 = 3.04 cfs
   GREEN SPACE 0.31 ACRES @ 1.87 = 0.58 cfs
   TOTAL PROPOSED = 3.62 cfs
   100 year – 20 min 0.79 ACRES @ 6.08 = 4.80 cfs
   0.31 ACRES @ 2.95 = 0.91 cfs
   100 year 20 min TOTAL = 5.71 cfs

   TOTAL DIFFERENTIAL: 3.62 cfs – 3.40 cfs = 0.22 cfs INCREASE IN RUNOFF

   TOTAL DIFFERENTIAL 100 year – 20 min = 5.71 cfs – 5.37 cfs = 0.34 cfs INCREASE IN RUNOFF

   NO DETENTION REQUIRED
9. ALL PAVING TO BE IN ACCORDANCE WITH THE CITY OF O'FALLON STANDARDS AND SPECIFICATIONS.
10. SIDEWALKS, CURB RAMPS, RAMP AND ACCESSIBLE PARKING SPACES SHALL BE CONSTRUCTED IN ACCORDANCE WITH THE CURRENT APPROVED "AMERICANS WITH DISABILITIES ACT ACCESSIBILITY GUIDELINES" (ADAAG) ALONG WITH THE REQUIRED GRADES, CONSTRUCTION MATERIALS, AND SPECIFICATIONS AND SIGNAGE.
11. A PHOTOMETRIC PLAN WILL BE SUBMITTED WITH THE CONSTRUCTION PLANS. LIGHTING SHALL BE DESIGNED FOR A MAXIMUM OF 0.4 FOOT CANDLES ALONG PROPERTY LINE. LIGHTING VALUES WILL BE REVIEWED ON SITE PRIOR TO THE FINAL OCCUPANCY INSPECTION. CORRECTIONS WILL NEED TO BE MADE IF NOT IN COMPLIANCE WITH CITY STANDARDS.
12. ALL NEW UTILITIES WILL BE LOCATED UNDERGROUND.
13. THE MAXIMUM SLOPE SHALL BE 3:1.
14. ALL HVAC AND MECHANICAL UNITS ON SITE SHALL BE PROPERLY SCREENED AS REQUIRED BY CITY CODE. ROOFTOP UNITS SHALL BE SCREENED BY A PARAPET WALL THAT EXTENDS AROUND THE ENTIRE PERIMETER OF THE BUILDING; THE PARAPET SHALL HAVE A MINIMUM HEIGHT THAT IS AT LEAST AS TALL AS THE TALLEST UNIT MOUNTED ON THE ROOF; GROUND MOUNTED HVAC AND MECHANICAL UNITS SHALL BE SCREENED BY FENCING, VEGETATION, OR SOME OTHER MEANS (APPROVED BY THE PLANNING AND ZONING COMMISSION) THAT HAS A MINIMUM HEIGHT THAT IS AT LEAST AS TALL AS THE TALLEST UNIT BEING SCREENED.

NOTE:
AS-BUILT LOCATION INFORMATION FOR THE 12" WATER MAIN PROVIDED BY THE O'FALLON PUBLIC WORKS DEPARTMENT.

THE LOCATION OF THE 6" FIRE LINE AND SANITARY LATERAL HAVE BEEN LOCATED AND MEASURED BY THE CONTRACTOR THAT INSTALLED AND CONSTRUCTED THEM AND THE RESULTS OF THOSE MEASUREMENTS ARE SHOWN ON THIS SET OF AS-BUILT WATERLINE PLANS.

MISSOURI ONE CALL SYSTEM, INC. 1-800-344-7483 STOP! CALL BEFORE YOU DIG!

CALL BEFORE YOU DIG!
1-800-DIG-RITE

UNDERGROUND UTILITIES HAVE BEEN PLOTTED FROM AVAILABLE INFORMATION AND THEREFORE THEIR LOCATIONS SHALL BE CONSIDERED APPROXIMATE ONLY. THE VERIFICATION OF THE LOCATION OF ALL UNDERGROUND UTILITIES, EITHER SHOWN OR NOT SHOWN ON THESE PLANS SHALL BE THE RESPONSIBILITY OF THE CONTRACTOR, AND SHALL BE LOCATED PRIOR TO ANY GRADING OR CONSTRUCTION OF THE IMPROVEMENTS.

AS-BUILT WATERLINE PLAN

PROJECT TITLE:
EL TIO PEPE MEXICAN RESTAURANT
315 WEST TERRA LANE
O'FALLON, ST. CHARLES, MISSOURI 63366

Bax Project #97-9351A | Issue Date: 04/12/2017

ENGINEERING PLANNING SURVEYING
221 Point West Blvd.
St. Charles, MO 63301
636-928-5552
FAX 928-1718

DISCLAIMER OF RESPONSIBILITY
I hereby specify that the documents intended to be authenticated by my seal are limited to this sheet, and I hereby disclaim any responsibility for all other Drawings, Specifications, Estimates, Reports or other documents or instruments relating to or intended to be used for any part or parts of the architectural or engineering project or survey.

STATE OF MISSOURI
CLIFFORD L. HEITMANN
NUMBER E-29817
REGISTERED PROFESSIONAL ENGINEER
CLIFFORD L. HEITMANN
CIVIL ENGINEER 8-8-19
E29817

Copyright 2017
Bax Engineering Company, Inc.
Engineering Authority No. 000655
Surveying Authority No. 000144
All Rights Reserved

REVISIONS

09/19/17	CITY COMMENTS
10/04/17	CITY COMMENTS
08/08/19	AS-BUILT PLANS

Developer / Owner:
WR HOLMAN, LLC
2 HICKORY HILL DRIVE
O'FALLON, MISSOURI 63366
(636) 734-1815

COVER SHEET

P+Z No.
33-14.01

CUP No.
33-14.01.01

Page No.
1 of 18

LAST SAVE:8/8/2019 BY:TMYERS LAST PLOT: 8/8/2019 BY:TONY MYERS
FILE LOCATION: \\VAULTSERVER\CIVIL 3D PROJECTS\9351A 315 WEST TERRA\SURVEY\ASBUILTS\97-9351A CONTRACTOR ONLY AB FIRE LINE AND SEWER 4-1-19.DWG

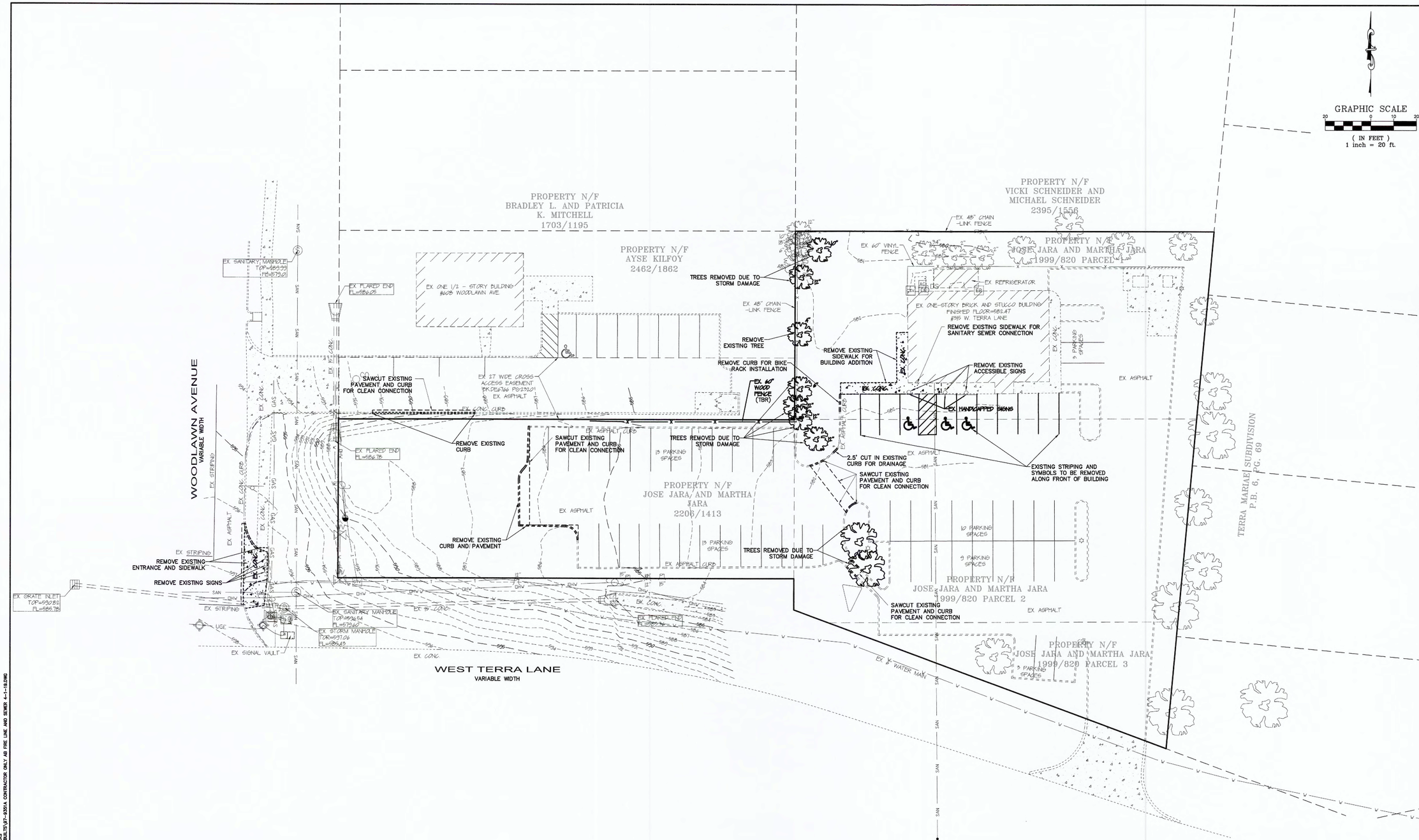

AS-BUILT WATERLINE PLAN

CALL BEFORE YOU DIG!
1-800-DIG-RITE

UNDERGROUND UTILITIES HAVE BEEN PLOTTED FROM AVAILABLE INFORMATION AND THEREFORE THEIR LOCATIONS SHALL BE CONSIDERED APPROXIMATE ONLY. THE VERIFICATION OF THE LOCATION OF ALL UNDERGROUND UTILITIES, EITHER SHOWN OR NOT SHOWN ON THESE PLANS SHALL BE THE RESPONSIBILITY OF THE CONTRACTOR, AND SHALL BE LOCATED PRIOR TO ANY GRADING OR CONSTRUCTION OF THE IMPROVEMENTS.

PROJECT TITLE:
EL TIO PEPE MEXICAN RESTAURANT

315 WEST TERRA LANE
O'FALLON, ST. CHARLES,
MISSOURI 63366

Box Project # 97-5351A | Issue Date: 04/12/2017

ENGINEERING
PLANNING
SURVEYING
2221 Point West Blvd.
St. Charles, MO 63301
636-928-5552
FAX 928-1718

DISCLAIMER OF RESPONSIBILITY
I hereby specify that the documents intended to be authenticated by my seal are limited to this sheet, and I hereby disclaim any responsibility for all other Drawings, Specifications, Estimates, Reports or other documents or instruments relating to or intended to be used for any part or parts of the architectural or engineering project or survey.

STATE OF MISSOURI
CLIFFORD L. HEITMANN
NUMBER E-29817
REGISTERED PROFESSIONAL ENGINEER
CLIFFORD L. HEITMANN
PROFESSIONAL ENGINEER
E29817
4-17-17

Copyright 2017
Box Engineering Company, Inc.
Engineering Authority No. 000655
Surveying Authority No. 000144
All Rights Reserved

REVISIONS

09/19/17	CITY COMMENTS
10/04/17	CITY COMMENTS
08/08/19	AS-BUILT PLANS

Developer / Owner:
WR HOLMAN, LLC
2 HICKORY HILL DRIVE
O'FALLON, MISSOURI 63366
(636) 734-1815

DEMOLITION PLAN

P+Z No.
33-14.01

CUP No.
33-14.01.01

Page No.
3 of 18

LAST SAVED:8/8/2019 BY:TWYDES LAST PLOT:8/8/2019 BY:TONY WYDES
FILE LOCATION:\\WALTSERVER\CIVIL 3D PROJECTS\2005\A 315 WEST TERRA\SURVEY\ASBUILTS\97-5351A CONTRACTOR ONLY AB FIRE LINE AND SEWER 4-1-19.DWG

COMMERCIAL

GENERAL NOTES

~~GN # 1 Driveway locations shall not interfere with the sidewalk handicap ramps, or curb inlet sumps~~

GN # 2 Sidewalks, curb ramps, ramps and accessible parking spaces shall be constructed in accordance with the current approved "American with Disabilities Act Accessibility Guidelines" (ADAAG) along with the required grades, construction materials, specifications and signage. If any conflict occurs between the above information and the plans, the ADAAG guidelines shall take precedence and the contractor prior to any construction shall notify the Project Engineer.

GN # 3 Truncated domes for curb ramps located in public right of way shall meet ADA requirements and shall be constructed using red pre cast truncated domes per pavement details.

~~GN # 4 Any proposed pavilions or playground areas will need a separate permit from the Building Division.~~

GN # 5 The Contractor is responsible to call Missouri One Call and The City of O'Fallon for the location of utilities. Contact the City of O'Fallon (636) 379-3814 for the location of City maintained cable for street lights and traffic signals, all other utilities call Missouri One Call 1-800-DIG-RITE. 1-800-344-7483

GN # 6 All proposed utilities and/or utility relocations shall be located underground.

GN # 7 All proposed fencing requires a separate permit through the Planning and Development Division.

GN # 8 All construction operations and work zone traffic control within the right of way will follow MoDOT or M.U.T.C.D. standards whichever is more stringent.

~~GN # 9 All free standing signs shall be located a minimum of ten (10) feet away from any right of way line and/or property line and a minimum of three (3) feet from the back of curbing or sidewalk. All signs shall abide by the regulations for visibility at corners, including corners from driveways and the street it intersects per Section 400.260 of the O'Fallon Zoning Code.~~

~~GN #10 All subdivision identification or directional sign(s) must have the locations and sizes approved and permitted separately through the Planning and Development Division.~~

GN #11 Materials such as trees, organic debris, rubble, foundations, and other deleterious material shall be removed from the site and disposed of in compliance with all applicable laws and regulations. If the material listed previously are reused, a letter from a soil Engineer must clarify amount, location, depth. ect. and be approved with the construction plans. Landfill tickets for such disposal shall be maintained on file by the developer. Burning on site shall be allowed only by permit from the local fire district. If a burn pit is proposed the location and mitigation shall be shown on the grading plan and documented by the soils engineer.

GN #12 Twenty-four (24) hours prior to starting any of the work covered by the above plans and after approval thereof, the developer shall make arrangements with the Construction Inspection Office to provide for inspection of the work, sufficient in the opinion of the City Engineer, to assure compliance with the plans and specifications as approved.

GN #13 The City Engineer or their duly authorized representative shall make all necessary inspections of City infrastructure, escrow items or infrastructure located on the approved plans.

Erosion Control Notes

EN # 1 The Permittee shall assume complete responsibility for controlling all siltation and erosion of the project area. The Permittee shall use whatever means necessary to control erosion and siltation including, but not limited to, staked straw bales and/or siltation fabric fences (possible methods of control are detailed in the plan). Control shall commence with the clearing operations and be maintained throughout the project until acceptance of the work by City of O'Fallon and as needed by MoDOT. The Permittee's responsibilities include all design and implementation as required to prevent erosion and the depositing of silt. The City of O'Fallon and as required by MoDOT may at their option direct the Permittee in his methods as deemed fit to protect property and improvements. Any depositing of silt or mud on new or existing pavement shall be removed cleaned immediately. Any depositing of silts or mud in new or existing storm sewers and/or swales shall be removed after each rain and affected areas to the satisfaction of the City of O'Fallon and as required by MoDOT."

EN # 2 All erosion control systems are to be inspected and corrected weekly, especially within 48 hours of any rain storm resulting in one-half inch of rain or more. Any silt or debris leaving the site and affecting public right of way or storm water drainage facilities shall be cleaned up within 24 hours after the end of the storm.

EN # 3 Erosion control devices (silt fence, sediment basin, etc.) shall be in accordance with St. Charles County Soil and Water Conservation District Erosion and Sediment Control guidelines.

EN # 4 This development is required to provide long term post construction BMP's such as; low impact design, source control and treatment controls that protects water quality and controls run off to maximum extent practical in compliance with Phase II Illicit Storm Water Discharge Guidelines. (Ord. 5082, section 405.0245)

EN #5 Graded areas shall be seeded and mulched (strawed) within 14 days of stopping land disturbance activities. Unless it can be shown to the City Engineer that weather conditions are not favorable, vegetative growth is to be established within 6 weeks of stopping grading work on the project. The vegetative growth established shall be sufficient to prevent erosion and the standard shall be as required by EPA and DNR. (70% coverage per square foot) Ord. 5242, Section 405.070

Grading Notes

GRN #1 Developer must supply City construction inspectors with soil reports prior to and during site grading. The soil report will be required to contain the following information on soil test curves (Proctor reports) for projects within the City:

1. Maximum dry density
2. Optimum moisture content
3. Maximum and minimum allowable moisture content
4. Curve must be plotted to show density from a minimum of 90% Compaction and above as determined by the "Modified AASHTO T-180 Compaction Test" (A.S.T.M.-D-1157) or from a minimum of 95% as determined by the "Standard Proctor Test ASSHTO T-99, Method C" (A.S.T.M.-D-698). Proctor type must be designated on document.
5. Curve must have at least 5 density points with moisture content and sample locations listed on document
6. Specific gravity
7. Natural moisture content
8. Liquid limit
9. Plastic limit

Be advised that if this information is not provided to the City's Construction Inspector the City will not allow grading or construction activities to proceed on any project site.

GRN #2 All fill placed in areas other than proposed storm sewers, sanitary sewers, proposed roads, and paved areas shall be compacted from the bottom of the fill up in 8" lifts and compacted to 90% maximum density as determined by Modified AASHTO T-180 compaction test or 95% of maximum density as determined by the Standard Proctor Test AASHTO T-99. Ensure the moisture content of the soil in fill areas corresponds to the compactive effort as defined by the Standard or Modified Proctor Test. Optimum moisture content shall be determined using the same test that was used for compaction. Soil compaction curves shall be submitted to the City of O'Fallon prior to the placement of fill.

GRN # 3 The surface of the fill shall be finished so it will not impound water. If at the end of a days work it would appear that there may be rain prior to the next working day, the surface shall be finished smooth. If the surface has been finished smooth for any reason, it shall be scarified before proceeding with the placement of succeeding lifts. Fill shall not be placed on frozen ground, nor shall filling operations continue when the temperature is such as to permit the layer under placement to freeze.

~~GRN # 4 All sediment and detention basins are to be constructed during the initial phase of the grading operation or in accordance with the approved SWPPP.~~

GRN # 5 When grading operations are complete or suspended for more than 14 days, permanent grass must be established at sufficient density to provide erosion control on site. Between permanent grass seeding periods, temporary cover shall be provided according to St. Charles Soil and Water Conservation District - Model Sediment and Erosion Control Regulations. All finished grades (areas not to be disturbed by improvements) in excess of 20% slopes (5:1) shall be mulched and tacked at a rate of 100 pounds per 1000 square feet when seeded.

GRN # 6 No slopes shall exceed 3 (horizontal): 1 (vertical) unless otherwise approved by the soils report and specifically located on the plans and approved by the City Engineer.

GRN # 7 All low places whether on site or off shall be graded to provide drainage with temporary ditches.

~~GRN # 8 All existing wells on site shall be capped per DNR standards.~~ *note: No wells, cisterns and/or springs exist on the property*

Grading Notes Continued

GRN #10 All trench back fills under paved areas shall be granular back fill, and compacted mechanically. All other trench back fills may be earth material (free of large clods, or stones) and compacted using either mechanical or water jetting. Granular material and earth material associated with new construction outside of pavements may be jetted, taking care to avoid damage to newly laid sewers. The jetting shall be performed with a probe route on not greater than 7.5 foot centers with the jetting probe centered over and parallel with the direction of the pipe. Trench widths greater than 10 feet will require multiple probes every 7.5 foot centers.

a) Depth, Trench back fills less than 8 feet deep shall be probed to a depth extending half the depth of the trench back fill, but not less than 3 feet. Trench back fill greater than 8 feet in depth shall be probed to half the depth of the trench back fill but not greater than 8 feet.
b) Equipment, The jetting probe shall be a metal pipe with an interior diameter of 1.5 to 2 inches.
c) Method, Jetting shall be performed from the lowest surface topographic point and proceed toward the highest point, and from the bottom of the trench back fill toward the surface. The flooding of each jetting probe shall be started slowly allowing slow saturation of the soil. Water is not allowed to flow away from the trench without first saturating the trench.
d) Surface Bridging, The contractor shall identify the locations of the surface bridging (the tendency for the upper surface to crust and arch over the trench rather than collapse and consolidate during the jetting process). The contractor shall break down the bridged areas using an appropriate method such as wheels or bucket of a backhoe. When surface crust is collapsed, the void shall be back filled with the same material used as trench back fill and rejetted. Compaction of the materials within the sunken/jetted area shall be compacted such that no further surface subsidence occurs.

GRN #11 Site grading.

a. Within City right-of-way. Material is to be placed in eight (8) inch to twelve (12) inch loose lifts and compacted per the approved compaction requirements. One (1) compaction test will be performed every two hundred fifty (250) feet along the centerline for each lift.
b. Outside of City right-of-way. Material is to be placed in eight (8) inch to twelve (12) inch loose lifts and compacted per the approved compaction requirements. One (1) compaction test will be performed at two (2) foot vertical intervals and approximately every one thousand (1,000) cubic yards.

Sanitary Sewer Notes

SAN # 1 All sanitary sewer installation is to be in accordance with M.S.D. 2007 standards and specifications except as modified by the City of O'Fallon Ordinances.

~~SAN # 2 Brick shall not be used in the construction of sanitary sewer structures. Pre cast concrete structures are to be used unless otherwise approved by the City of O'Fallon.~~

SAN # 3 Connections at all sanitary structures are to be made with A-Lock joint or equal

SAN # 4 All sanitary laterals shall be a minimum of 4" residential, 6" commercial diameter pipe.

~~SAN # 5 All sanitary mains shall be a minimum of 8" diameter pipe.~~

~~SAN # 6 All sanitary sewer line with a slope greater than 20% will require concrete cradle or concrete collar. Sanitary line with a slope greater than 50% will require a special approved design as shown on detail sheet.~~

~~SAN # 7 All manholes built within the 100 year flood plain must have lock type watertight manhole covers.~~

~~SAN # 8 All sanitary sewer mains must have a minimum of 42" cover.~~

~~SAN # 9 When sanitary mains cross over storm line the sanitary main must be ductile iron pipe for 10 feet on each side of the crossing.~~

~~SAN #10 Encase with concrete both sanitary and storm sewer at crossing when storm sewer is within 18 inches above sanitary sewer. Add concrete cradle to only RCP storm sewer and encase HDPE storm sewer when it is more than 18 inches above sanitary line. Show on profile sheet.~~

~~SAN #11 The sanitary sewers should run diagonally through the side yards to minimize any additional utility easements required.~~

SAN #12 All sanitary sewer structures shall be waterproofed on the exterior in accordance to Missouri DNR specifications 10CSR-8.120 (7)(E).

SAN #13 All sanitary sewer pipe shall be SDR35 or equal.

SAN #14 All sanitary sewer manholes and pipes will be tested to the following specifications. ASTM C1244, Standard testing method for Concrete Sewer Manhole by Negative Air Pressure (Vacuum), Latest revision ASTM F1417, Standard testing method for Installation Acceptance of Plastic Gravity Sewer Lines Using Low Pressure Air, Latest revision.

SAN #15 Add 1" minus rock back fill to all sanitary sewer and all other utilities that lie within the 1:1 shear plane of the road.

~~Storm Sewer Notes~~

~~STM # 1 All Storm Sewer installation is to be in accordance with M.S.D. 2007 standards and specifications except as modified by the City of O'Fallon ordinances.~~

~~STM # 2 Brick shall not be used in the construction of storm sewer structures. Pre cast concrete structures are to be used unless otherwise approved by the City of O'Fallon.~~

~~STM # 3 A 5/8" trash bar shall be installed horizontally in the center of the opening(s) in all curb inlets and area inlets.~~

~~STM # 4 HDPE pipe is to be N-12WT or equal and to meet ASTM F1417 water tight field test.~~

~~STM # 5 Encase with concrete both sanitary and storm sewer at crossing when storm sewer is within 18 inches above sanitary sewer. Add concrete cradle to only RCP storm sewer and encase HDPE storm sewer when it is more than 18 inches above sanitary line. Show on profile sheet.~~

~~STM # 6 The storm sewers should run diagonally through the side yards to minimize any additional utility easements required.~~

~~STM # 7 All concrete pipes will be installed with O-ring rubber type gaskets.~~

~~STM # 8 Connections at all storm structures are to be made with A-lock joint or equal.~~

~~STM # 9 Pre cast concrete inlet covers are not to be used.~~

~~STM #10 The swale in the detention basins shall have a minimum 1% longitudinal slope and be lined with a permanent erosion control blanket that will allow infiltration of storm water.~~

~~STM #11 All storm sewer shall be reinforced concrete pipe or H.D.P.E. pipe. All structures and flared end sections must be concrete. Manufacturing specifications must be followed and details provided for the installation of H.D.P.E. pipe. H.D.P.E. pipe will not be allowed for detention basin outflows, final pipe run to detention basins, creek discharge or other approved means.~~

~~STM #12 The discharge point of all flared end sections shall be protected by rip rap or other approved means.~~

~~STM #13 Rip rap shown at flared end sections will be evaluated in the field by the Engineer, Contractor, and City inspectors after installation for effectiveness and field modified, if necessary to reduce erosion on and off site.~~

~~STM #14 Add 1" minus rock back fill to all storm sewer that lie within the 1:1 shear plane of the road.~~

Water Notes

~~WN # 1 Fire hydrants shall be a maximum of 600' apart. Local fire district approval is required.~~

~~WN # 2 Coordinate with the water company on the location of water meters.~~

WN # 3 All water main must have a minimum of 42" of cover. (City water mains)

WN # 4 Provide water valves to isolate the system.

WN # 5 All water mains shall be class 200 SDR 21 or equal with locator/tracer wires

WN # 6 DISINFECTING:

Disinfecting shall be accomplished by placing sufficient hypo chlorite granule (HTH) in each section of pipe to achieve a chlorine residual in the pipeline, upon initial filling, of 50 mg/L (PPM). HT. tablets will not be allowed. Following completion of the pipeline, it shall be slowly filled with water and a sample will be taken immediately and the chlorine residual must be 50 mg/L or greater. The solution shall be allowed to stand for 24 hours and a sample shall then be taken. The chlorine residual after 24 hours shall be 30 mg/L or greater. If the piping shows insufficient chlorine residuals in either test, the piping shall be re-chlorinated by the injection of hypo chlorite solution until satisfactory results are achieved. All disinfecting shall be done by the contractor. Only the testing to determine the chlorine residual will be done by the City.

WN # 7 PRESSURE TESTING:

Immediately following disinfection, the piping shall be pumped to a pressure (at the lowest point in the project) of 150 psi or higher where the working pressure is higher than 150 PSI as determined by the City. In such cases, the pressure shall be as specified by the City and two pressure tests shall be conducted. The first test shall be with the fire hydrant auxiliary valve open and be to 150 PSI. The second test shall be with the fire hydrant auxiliary valve closed and be to the higher pressure as directed by the City. All pumping equipment and pressure gauges shall be provided by the contractor. After achieving the test pressure, the piping shall be left closed for a period of two (2) hours. At the end of this time the pressure drop shall not exceed 2 psi. In addition, if the pressure appears, in judgment of the City's representative, to be continuing to drop, the test shall be continued for another two (2) hours and if any further drops occur, the test shall be considered a failure. If the pressure test fails, the contractor will be required to find and correct the source of the leakage. If this requires draining of the pipeline, when the leakage is corrected, the pipeline must be re-disinfected and the pressure tested again until satisfactory result are achieved. Any MDNR required dechlorination will be performed by the contractor.

WN # 8 All tops for valves, meters, and manholes are to be constructed to within 1 inch (0.08') of finish grade. Grading around structure tops on slopes need to be accounted for.

Water Notes

WN #10 BACTERIOLOGICAL TESTING:

After satisfactory disinfection and pressure testing, a sample shall be taken by the contractor in the presence of a City representative and submitted to a laboratory approved by the Missouri Department of Natural Resources and the City for bacteriological analysis. After 24 hours, a second sample shall be taken in a like manner and submitted for analysis. The two samples taken on consecutive days ,a minimum of 24 hours apart, must be found to be "safe" by the testing laboratory, and copies of the test results must be supplied to the City. If the samples are not found to be "safe" further flushing and/or disinfection as directed by the City shall be conducted by the contractor until "safe" samples on two consecutive test days are achieved. Following successful bacteriological testing and a determination by the City that the samples are "safe", the mains may be placed into service.

Roadway Notes

RN # 1 All paving (public and private) to be in accordance with 2006 St. Charles County Standards and Specifications except as modified by the City of O'Fallon ordinances.

~~RN # 2 If the intersecting road does not have a curb, then the curb on the new entrance shall begin 10' from the edge of the existing road.~~

~~RN # 3 Provide 6" of concrete over 4" of MoDot type 1 or type 5 aggregate rock or asphalt equivalent for minor residential streets per City Code 405.370.~~

~~RN # 4 Multi-use trail (when required) Shall have a minimum of 3" Type "C" Asphalt over 4" aggregate base per City requirements.~~

RN # 5 Type C (BP-1) Compaction requirements shall be 98% minimum density according to St. Charles Co. Standard Specifications.

~~RN # 6 Provide pavement striping at any point where the multi-use trail crosses existing or proposed pavement.~~

~~RN # 7 All street stub outs over 250' in length will require a temporary turnaround.~~

RN # 8 All sub grade in cut or fill will need to conform to the City of O'Fallon Compaction requirements

RN # 9 Material Testing And Frequency. Materials for construction shall be tested and inspected per the appropriate ASTM code or at the City Engineer's discretion. The developer's engineer shall perform the following quality control guidelines:

1. Concrete.
   a. Cylinders/compressive strength. One (1) set of four (4) cylinders within the first fifty (50) cubic yards and one (1) set per one hundred (100) cubic yards thereafter. One (1) cylinder must be tested at seven (7) days, one (1) at fourteen (14) days and two (2) at twenty-eight (28) days. If the first (1st) cylinder does not meet specifications at twenty-eight (28) days, then the second (2nd) cylinder must be held and tested at day fifty-six (56).
   b. Percent air temperature. First (1st) truck batch each day and two (2) thereafter until a consistency is encountered. Once a consistency is encountered, then tests will be performed in conjunction with the concrete cylinders.
   c. Slump. First (1st) truck batch each day and two (2) thereafter until a consistency is encountered. Once a consistency is encountered, then tests will be performed in conjunction with the concrete cylinders.
   d. If concrete is batched from more than one (1) plant, then the aforementioned guidelines will be applicable to each plant.
2. Sub grade and base.
   a. Proof roll as described in Section 405.210(B).
   b. One (1) compaction test per two hundred fifty (250) feet of mainline paving, three (3) tests per intersection, five (5) tests within cul-de-sacs and one (1) test per repair slab.
   c. Gradation test for sub base material.
3. Asphalt.
   a. One (1) set of compaction tests per two hundred fifty (250) feet of mainline. One (1) set includes three (3) tests across the paved lane at the same station.
   b. One (1) bulk density test per paving operation.

RN #10 Approval Of Sub grade And Base (Sub base). The City Engineer or representative shall approve the sub grade before any base is placed thereon and shall approve the base before concrete or surface course is placed. The sub grade and base shall be so constructed that it will be uniform in density throughout.

RN #11 In all fill areas in the roadways, soil tests shall be submitted and approved by the City Engineer for each foot of fill and at least one (1) test and an average of one (1) test within every two hundred fifty (250) feet.

RN #12 No traffic will be allowed on new concrete pavement until it has cured for seven (7) days and it reaches three thousand five hundred (3,500) psi within 28 days. Concrete pavements shall not be approved unless it reaches a strength of four thousand (4,000) psi.Cylinders/compressive strength. One (1) set of four (4) cylinders within the first fifty (50) cubic yards and one (1) set per one hundred (100) cubic yards thereafter. One (1) cylinder must be tested at seven (7) days, one (1) at fourteen (14) days and two (2) at twenty-eight (28) days. If the first (1st) cylinder does not meet specifications at twenty-eight (28) days, then the second (2nd) cylinder must be held and tested at day fifty-six (56).

RN #13 Prior to placement of aggregate base material on sub grade and prior to placement of pavement on base material, the sub grade and base must be proof-rolled with a fully loaded (ten (10) ton load) tandem truck or equivalent tire vehicle with one (1) pass down each driving lane no faster than three (3) miles per hour. If soft spots are detected, or pumping, rutting or heaving occurs greater than one (1) inch at the sub grade, the roadbed shall be considered unsatisfactory and the soil in these areas shall be remediated to the depth indicated by the contractor's testing firm and approved by a representative of the City Engineer.

RN #14 Sub grade and base beneath pavements shall be compacted to St. Charles County Highway Department specifications. The moisture range shall be determined by the Standard or Modified Proctor Density Method AASHTO T-99 and within -2/+4 percentage points of the optimum moisture content.

RN #15 The entire width and length will conform to line, grade and cross section shown on the plans or as established by the engineer. If any settling or washing occurs, or where hauling results in ruts or other objectionable irregularities, the contractor shall improve the sub grade or base to the satisfaction of the City before the pavement is placed. Additional rolling or methods to verify compaction shall be at the discretion of the City Engineer. Tolerance allowed on all lines, grades and cross sections shall be plus or minus four-hundredths (+0.04) feet.

RN #16 Utility Work Prior To Base Construction. No base course work may proceed on any street until all utility excavations (storm and sanitary sewers, water, gas, electric, etc.) have been properly back filled with granular material, crushed stone or gravel mechanically tamped in ten (10) inch lifts. Utilities installed after sub grade preparation shall be bored. Compaction requirements shall follow St. Charles County standards (2006).

RN #17 Equipment calibration. The developer's contractors and subcontractors must have their equipment calibrated by the following minimum standards.

a. Air meter--weekly.
b. Cylinder compression--annually by independent calibration service.
c. Batch scales---monthly.
d. Nuclear testing devices--every six (6) months.
e. Proctor equipment--every six (6) months.
f. Slump cone--monthly.

RN #18 All permanent traffic control will be per M.U.T.C.D. or MoDot standards. S1-1 from the M.U.T.C.D. manual will be used at all crosswalk locations accompanied with either w16-9p or w16-7p signs

RN #19 All traffic signals, street signs, sign post, backs and bracket arms shall be painted black using Carboline Rust Bond Penetrating Sealer SG and Carboline 133 HB paint (or equivalent as approved by City of O'Fallon and MoDOT).

~~Flood plain Information~~ (SITE NOT IN FLOODPLAIN)

~~FP #1 A flood plain development application from the City is required for any work within the flood plain limits.~~

Retaining Walls: Terraced and Vertical

~~RW #1 A permit is required for all retaining walls that are 48 inches or taller in height, measured from the top of the footing to the top of the wall or for walls that support a surcharge load or that alter the channelized drainage of any lot or drainage area.~~

~~RW #2 Retaining walls will not be allowed in public right of way without written approval from the City Engineer.~~

~~RW #3 Any retaining wall more than thirty (30) inches tall which supports a walking surface that is within two (2) feet of the wall will require a guard on the retaining wall.~~

RW #4 Retaining walls that alter the channeled drainage of any lot or drainage area shall not be constructed without prior approval and permitting from the City of O'Fallon Engineering Department regardless of the height of the wall.

RW #5 See section 405.275 of the City code for additional design requirements.

AS-BUILT WATERLINE PLAN

PROJECT TITLE:
EL TIO PEPE MEXICAN RESTAURANT

315 WEST TERRA LANE
O'FALLON, ST. CHARLES, MISSOURI 63366

Bax Project #97-335A | Issue Date: 04/12/2017

ENGINEERING PLANNING SURVEYING
2221 Point Trail Blvd.
St. Charles, MO 63301
636-928-5602
FAX 928-1718

DISCLAIMER OF RESPONSIBILITY
I hereby specify that the documents intended to be authenticated by my seal are limited to this sheet, and I hereby disclaim any responsibility for all other Drawings, Specifications, Estimates, Reports or other documents or instruments relating to or intended to be used for any part or parts of the architectural or engineering project or survey.

REFERENCE DRAWING

REVISIONS

09/19/17	CITY COMMENTS
10/04/17	CITY COMMENTS
08/08/19	AS-BUILT PLANS

Developer / Owner:
WR HOLMAN, LLC
2 HICKORY HILL DRIVE
O'FALLON, MISSOURI 63366
(636) 734-1815

COMMERCIAL NOTES

P+Z No. 33-14.01

CUP No. 33-14.01.01

LAST SAVED:8/8/2019 BY:TWVERS LAST PLOTT:8/8/2019 BY:TONY VERS
FILE LOCATION:\\VAULTSERVER\CIVIL 3D PROJECTS\335A 315 WEST TERRA\SURVEY\ASBUILTS\97-335A CONTRACTOR ONLY AB FIRE LINE AND SEWER 4-1-18.DWG

NOTE:
ALL PARKING LOT STRIPING TO BE WHITE EXCEPT ADA STRIPING AND SYMBOLS WHICH SHALL BE BLUE.

LEGEND

LIMITS OF PROPOSED CROSS ACCESS EASEMENT

GRAPHIC SCALE
20 0 10 20
(IN FEET)
1 inch = 20 ft.

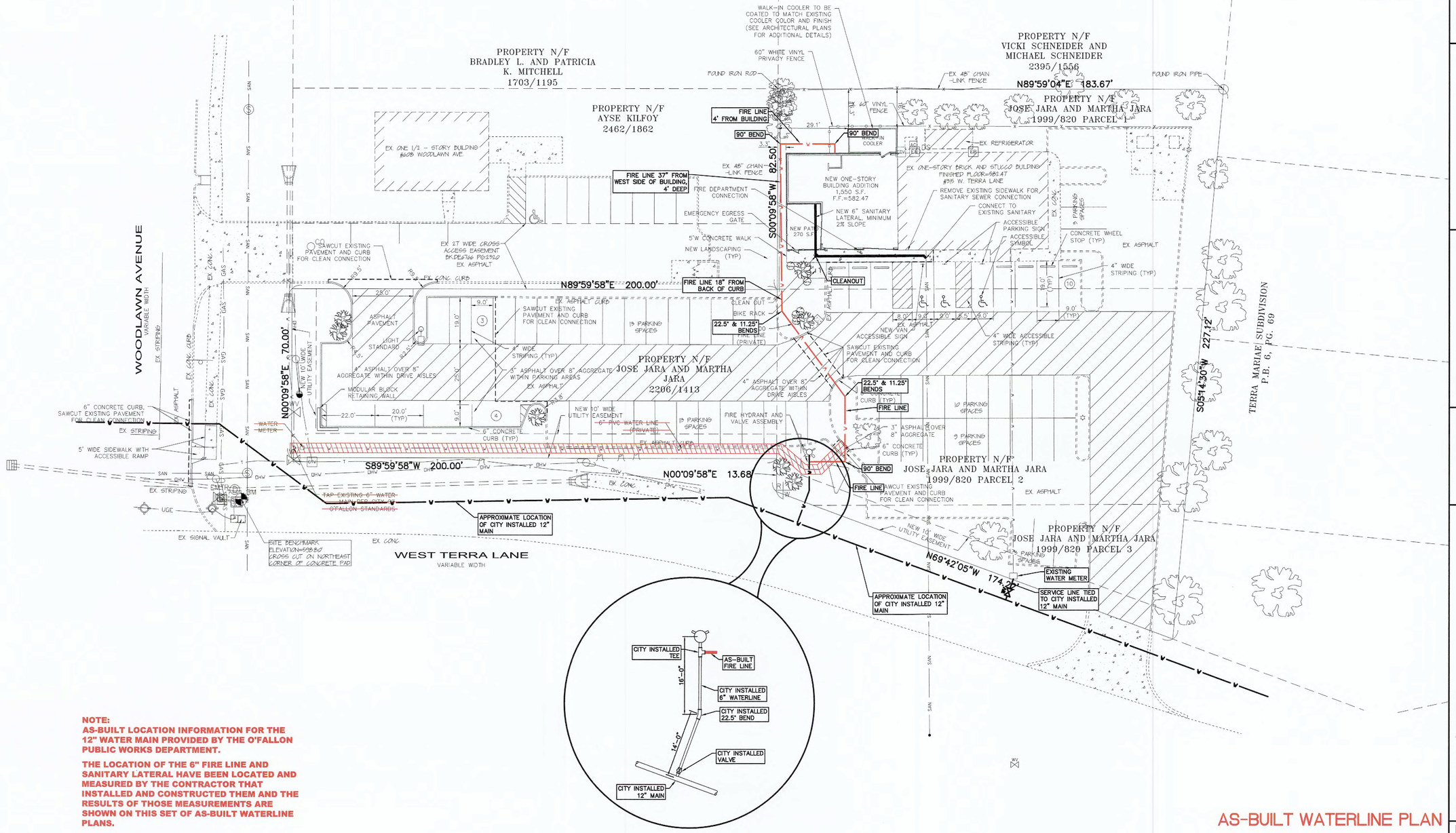

NOTE:
AS-BUILT LOCATION INFORMATION FOR THE 12" WATER MAIN PROVIDED BY THE O'FALLON PUBLIC WORKS DEPARTMENT.

THE LOCATION OF THE 6" FIRE LINE AND SANITARY LATERAL HAVE BEEN LOCATED AND MEASURED BY THE CONTRACTOR THAT INSTALLED AND CONSTRUCTED THEM AND THE RESULTS OF THOSE MEASUREMENTS ARE SHOWN ON THIS SET OF AS-BUILT WATERLINE PLANS.

AS-BUILT WATERLINE PLAN

CALL BEFORE YOU DIG!
1-800-DIG-RITE

UNDERGROUND UTILITIES HAVE BEEN PLOTTED FROM AVAILABLE INFORMATION AND THEREFORE THEIR LOCATIONS SHALL BE CONSIDERED APPROXIMATE ONLY. THE VERIFICATION OF THE LOCATION OF ALL UNDERGROUND UTILITIES, EITHER SHOWN OR NOT SHOWN ON THESE PLANS SHALL BE THE RESPONSIBILITY OF THE CONTRACTOR, AND SHALL BE LOCATED PRIOR TO ANY GRADING OR CONSTRUCTION OF THE IMPROVEMENTS.

PROJECT TITLE:
ASBUILTS FOR EL TIO PEPE MEXICAN RESTAURANT
315 WEST TERRA LANE
O'FALLON, ST. CHARLES, MISSOURI 63366

Bax Project # 97-9365A Issue Date: 04/12/2017

ENGINEERING PLANNING SURVEYING
221 Point West Blvd.
St. Charles, MO 63301
636-928-5652
FAX 928-1718

STATE OF MISSOURI
CLIFFORD L. HEITMANN
NUMBER E-29817
REGISTERED PROFESSIONAL ENGINEER
8-1-19

REVISIONS

05/16/19	PER CITY COMMENTS
08/08/19	AS-BUILT PLANS

Developer / Owner:
WR HOLMAN, LLC
2 HICKORY HILL DRIVE
O'FALLON, MISSOURI 63366
(636) 734-1815

FLAT PLAN

P+Z No. 33-14.01

CUP No. 33-14.01.01

Page No. 4 of 18

LAST SAVE:8/8/2019 BY:TMYERS
FILE LOCATION:\\VAL7SERVER\CIVIL 3D PROJECTS\BAX\A 315 WEST TERRA\SURVEY\ASBUILTS\97-9365A CONTRACTOR ONLY AS FIRE LINE AND SEWER 4-1-19.DWG
LAST PLOT: 8/8/2019 BY:TONY MYERS

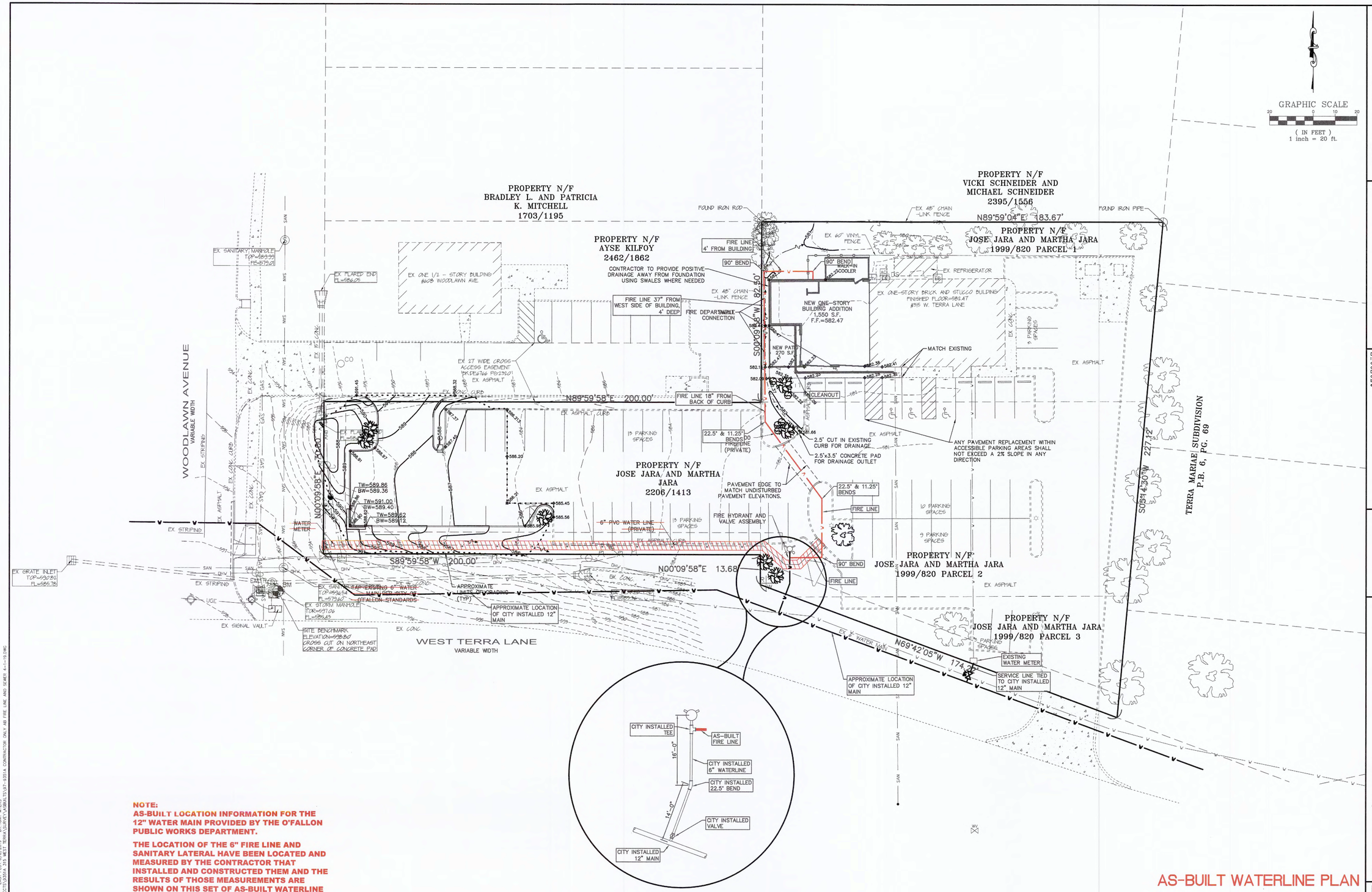

NOTE:
AS-BUILT LOCATION INFORMATION FOR THE 12" WATER MAIN PROVIDED BY THE O'FALLON PUBLIC WORKS DEPARTMENT.

THE LOCATION OF THE 6" FIRE LINE AND SANITARY LATERAL HAVE BEEN LOCATED AND MEASURED BY THE CONTRACTOR THAT INSTALLED AND CONSTRUCTED THEM AND THE RESULTS OF THOSE MEASUREMENTS ARE SHOWN ON THIS SET OF AS-BUILT WATERLINE PLANS.

AS-BUILT WATERLINE PLAN

CALL BEFORE YOU DIG!
1-800-DIG-RITE

UNDERGROUND UTILITIES HAVE BEEN PLOTTED FROM AVAILABLE INFORMATION AND THEREFORE THEIR LOCATIONS SHALL BE CONSIDERED APPROXIMATE ONLY. THE VERIFICATION OF THE LOCATION OF ALL UNDERGROUND UTILITIES, EITHER SHOWN OR NOT SHOWN ON THESE PLANS SHALL BE THE RESPONSIBILITY OF THE CONTRACTOR, AND SHALL BE LOCATED PRIOR TO ANY GRADING OR CONSTRUCTION OF THE IMPROVEMENTS.

PROJECT TITLE:
EL TIO PEPE MEXICAN RESTAURANT

315 WEST TERRA LANE
O'FALLON, ST. CHARLES, MISSOURI 63366

Box Project # 97-9351A | Issue Date: 04/12/2017

ENGINEERING
PLANNING
SURVEYING
221 Point West Blvd.
St. Charles, MO 63301
636-928-5562
FAX 928-1716

DISCLAIMER OF RESPONSIBILITY
I hereby specify that the documents intended to be authenticated by my seal are limited to this sheet, and I hereby disclaim any responsibility for all other Drawings, Specifications, Estimates, Reports or other documents or instruments relating to or intended to be used for any purpose or project by the architectural or engineering profession.

STATE OF MISSOURI
CLIFFORD L. HEITMANN
NUMBER E-29817
REGISTERED PROFESSIONAL ENGINEER
CLIFFORD L. HEITMANN
CIVIL ENGINEER
E29817

Copyright 2017
Box Engineering Company, Inc.
Engineering Authority No. 000655
Surveying Authority No. 000144
All Rights Reserved

REVISIONS

09/19/17	CITY COMMENTS
10/04/17	CITY COMMENTS
08/08/19	AS-BUILT PLANS

Developer / Owner:
WR HOLMAN, LLC
2 HICKORY HILL DRIVE
O'FALLON, MISSOURI 63366
(636) 734-1815

GRADING PLAN

P+Z No. 33-14.01

CUP No. 33-14.01.01

LAST SAVE: 8/8/2019 BY:TWYERS LAST PLOT: 8/8/2019 BY:TONY WYERS
FILE LOCATION: \\VAULT\SERVER\CIVIL 3D PROJECTS\9351A 315 WEST TERRA\SURVEY\ASBUILTS\VF-9351A CONTRACTOR ONLY AB FIRE LINE AND SEWER 4-1-19.DWG

THIS SHEET IS FOR DRAINAGE AREA PURPOSES ONLY – NOT FOR CONSTRUCTION

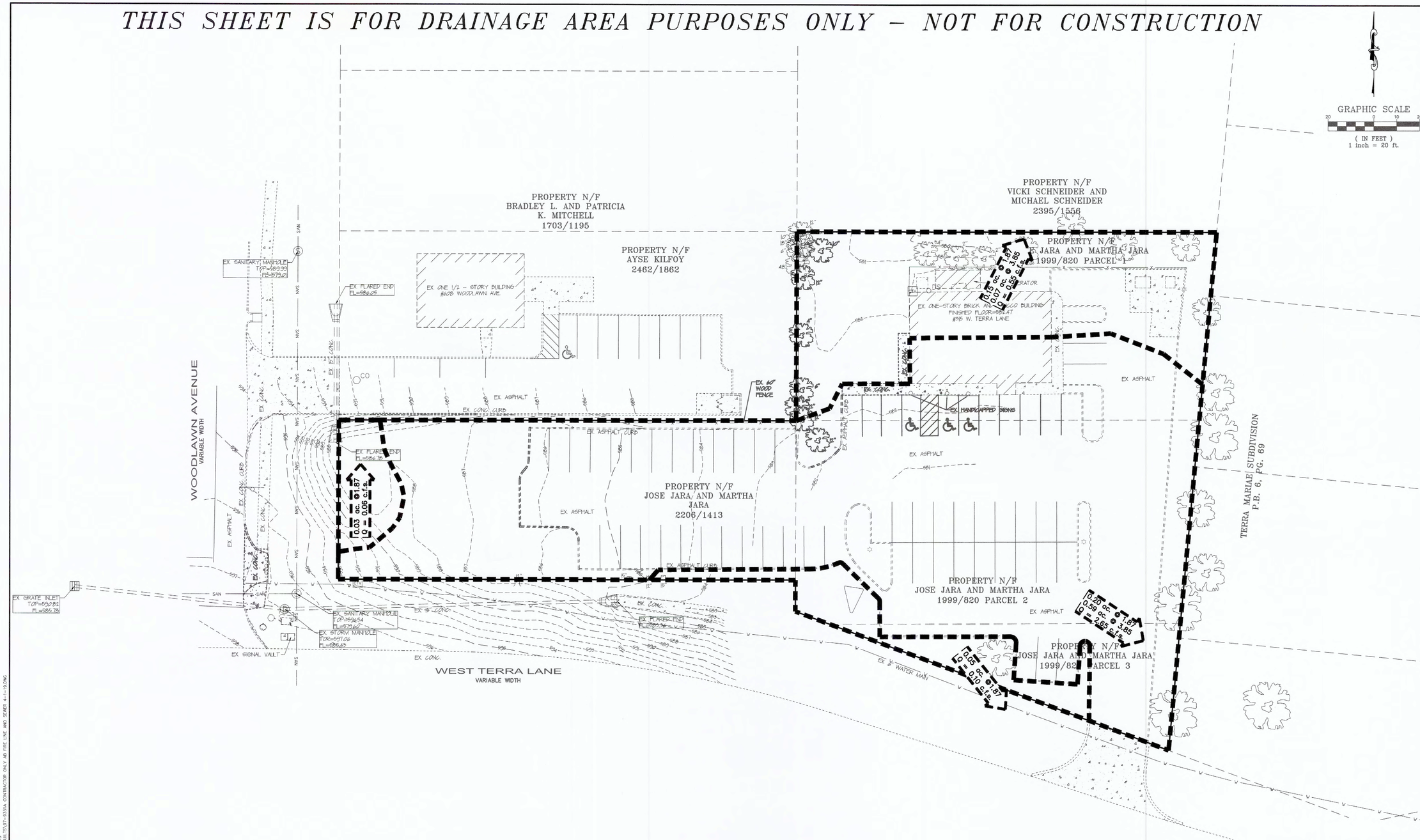

AS-BUILT WATERLINE PLAN

CALL BEFORE YOU DIG!
1-800-DIG-RITE

UNDERGROUND UTILITIES HAVE BEEN PLOTTED FROM AVAILABLE INFORMATION AND THEREFORE THEIR LOCATIONS SHALL BE CONSIDERED APPROXIMATE ONLY. THE VERIFICATION OF THE LOCATION OF ALL UNDERGROUND UTILITIES, EITHER SHOWN OR NOT SHOWN ON THESE PLANS SHALL BE THE RESPONSIBILITY OF THE CONTRACTOR, AND SHALL BE LOCATED PRIOR TO ANY GRADING OR CONSTRUCTION OF THE IMPROVEMENTS.

PROJECT TITLE:
EL TIO PEPE MEXICAN RESTAURANT

315 WEST TERRA LANE
O'FALLON, ST. CHARLES, MISSOURI 63366

Box Project # 97-5351A | Issue Date: 04/12/2017

ENGINEERING
PLANNING
SURVEYING
221 Point West Blvd.
St. Charles, MO 63301
636-928-5652
FAX 928-1718

DISCLAIMER OF RESPONSIBILITY
I hereby specify that the documents intended to be authenticated by my seal are limited to this sheet, and I hereby disclaim any responsibility for all other Drawings, Specifications, Estimates, Reports or other documents or instruments relating to or intended to be used for any purpose, including architectural or engineering projects.

STATE OF MISSOURI
CLIFFORD L. HEITMANN
NUMBER E-29817
REGISTERED PROFESSIONAL ENGINEER
2-5-19
CLIFFORD L. HEITMANN
CIVIL ENGINEER
E29817

Copyright 2017
Box Engineering Company, Inc.
Engineering Authority No. 000655
Surveying Authority No. 000144
All Rights Reserved

REVISIONS

09/19/17	CITY COMMENTS
10/04/17	CITY COMMENTS
08/08/19	AS-BUILT PLANS

Developer / Owner:
WR HOLMAN, LLC
2 HICKORY HILL DRIVE
O'FALLON, MISSOURI 63366
(636) 734-1815

PRE-DEVELOPED DRAINAGE AREAS

P+Z No. 33-14.01

CUP No. 33-14.01.01

Page No. 6 of 18

LAST SAVE: 8/8/2019 BY:TONY MYERS
LAST PLOT: 8/8/2019 BY:TONY MYERS
FILE: G:\CONVERSIONS\JOBS_TO PROJECTS\JOBA - 315 WEST TERRA LN\97-5351A CONTRACTOR ONLY AB FIRE LINE AND SEWER 4-1-19.DWG

THIS SHEET IS FOR DRAINAGE AREA PURPOSES ONLY – NOT FOR CONSTRUCTION

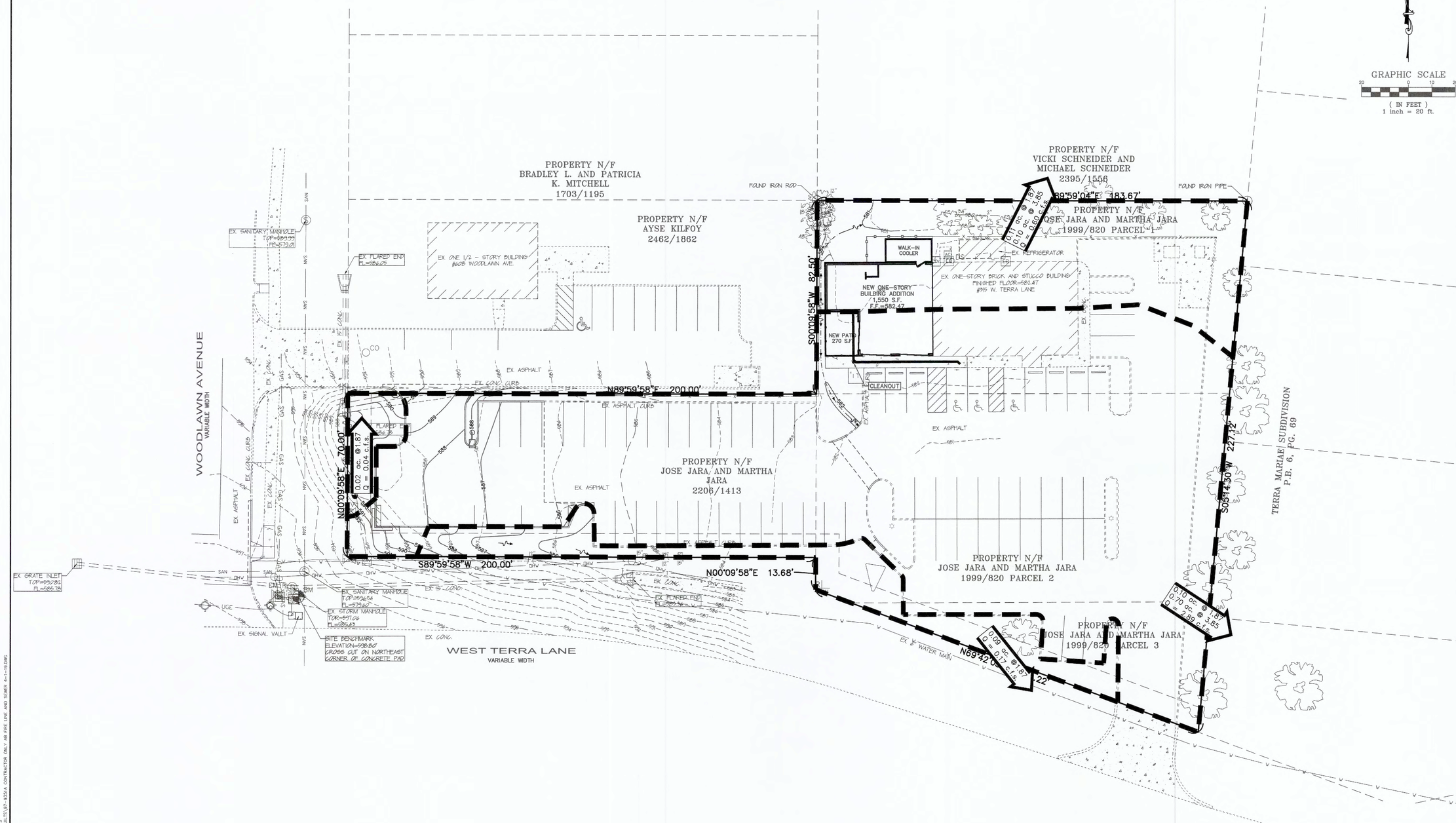

PROJECT TITLE:
EL TIO PEPE MEXICAN RESTAURANT

315 WEST TERRA LANE
O'FALLON, ST. CHARLES, MISSOURI 63366

Box Project # 97-9351A | Issue Date: 04/12/2017

ENGINEERING
PLANNING
SURVEYING
221 Point West Blvd.
St. Charles, MO 63301
636-928-5552
FAX 928-1718

DISCLAIMER OF RESPONSIBILITY
I hereby specify that the documents intended to be authenticated by my seal are limited to this sheet, and I hereby disclaim any responsibility for all other Drawings, Specifications, Estimates, Reports or other documents or instruments relating to or intended to be used for any part or parts of the architectural or engineering project.

STATE OF MISSOURI
CLIFFORD L. HEITMANN
NUMBER E-29817
REGISTERED PROFESSIONAL ENGINEER
10-8-19
CLIFFORD L. HEITMANN
CIVIL ENGINEER
E29817

Copyright 2017
Box Engineering Company, Inc.
Engineering Authority No. 000555
Surveying Authority No. 000144
All Rights Reserved

REVISIONS

09/19/17	CITY COMMENTS
10/04/17	CITY COMMENTS
08/08/19	AS-BUILT PLANS

Developer / Owner:
WR HOLMAN, LLC
2 HICKORY HILL DRIVE
O'FALLON, MISSOURI 63366
(636) 734-1815

POST-DEVELOPED DRAINAGE AREAS

AS-BUILT WATERLINE PLAN

CALL BEFORE YOU DIG!
1-800-DIG-RITE

UNDERGROUND UTILITIES HAVE BEEN PLOTTED FROM AVAILABLE INFORMATION AND THEREFORE THEIR LOCATIONS SHALL BE CONSIDERED APPROXIMATE ONLY. THE VERIFICATION OF THE LOCATION OF ALL UNDERGROUND UTILITIES, EITHER SHOWN OR NOT SHOWN ON THESE PLANS SHALL BE THE RESPONSIBILITY OF THE CONTRACTOR, AND SHALL BE LOCATED PRIOR TO ANY GRADING OR CONSTRUCTION OF THE IMPROVEMENTS.

P+Z No. 33-14.01

CUP No. 33-14.01.01

LAST SAVE:8/8/2019 BY:TMYERS
LAST PLOT:8/8/2019 BY:TONY MYERS
FILENAME:J:\WR HOLMAN\97-9351A - 315 WEST TERRA LANE - O'FALLON, MO\PROJECT FILES\97-9351A CONTRACTOR ONLY AS FIRE LINE AND SEWER 4-1-19.DWG

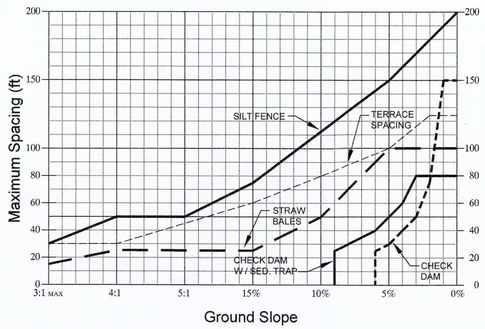

DESIGN CRITERIA

1. SILT FENCE FOR SHEET FLOW SHALL HAVE A MAXIMUM DRAINAGE AREA OF 1/4 ACRE PER 100 LF.
2. STRAW BALE BARRIERS FOR SHEET FLOW SHALL HAVE A MAXIMUM DRAINAGE AREA OF 1/4 ACRE PER 100 LF.
3. REFER TO INDIVIDUAL ESC FIGURE FOR INSTALLATION.
4. TERRACING INCLUDES LOGS, WATTLES & FILTER SOCKS.

CITY OF O'FALLON ENGINEERING DEPARTMENT O'FALLON, MISSOURI

SPACING CHART FOR ESC DEVICES

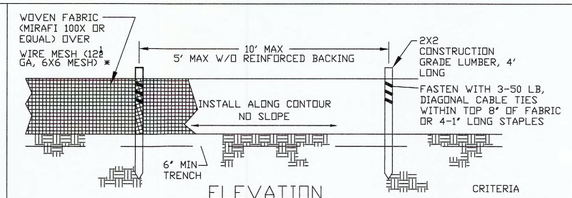

ELEVATION

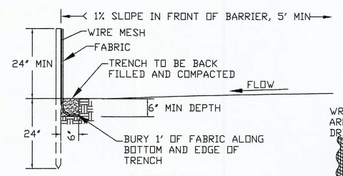

SECTION

NOTE: IF FABRIC IS INSTALLED BY EQUIPMENT DESIGNED TO SLICE INTO THE GROUND, THE TRENCH IS NOT REQ'D.

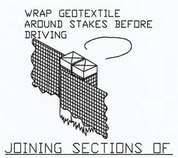

JOINING SECTIONS OF SILT FENCE

CRITERIA

1. SILT FENCE SHALL BE 24 INCHES HIGH.
2. SILT FENCE SHALL NOT BE USED FOR CONCENTRATED FLOWS.
3. GEOSYNTHETIC REINFORCED SILT FENCE BACKING MAY BE USED IN LIEU OF WIRE MESH.
4. WIRE MESH WILL BE USED AT LOCATIONS SHOWN ON THE APPROVED SWPPP.

CITY OF O'FALLON ENGINEERING DEPARTMENT O'FALLON, MISSOURI

SILT FENCE INSTALLATION SHEET FLOW (ONLY)

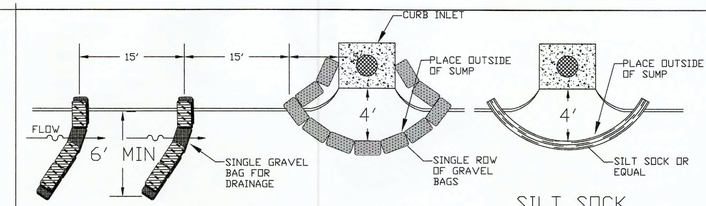

TRAP PLACEMENT AT LOW POINT

SILT SOCK (ALTERNATIVE)

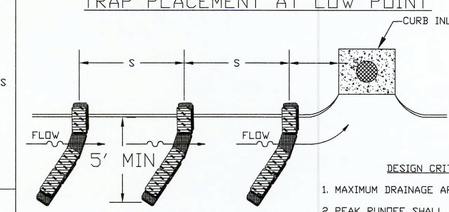

TRAP PLACEMENT AT INTERMEDIATE INLET

SPACING OF TRAPS

GUTTER SLOPE	S
LOW PT	15'
1%	20'
2%	15'
3% MAX.	10'

DESIGN CRITERIA

1. MAXIMUM DRAINAGE AREA - 1 ACRE.
2. PEAK RUNOFF SHALL BE ≤2 CFS BASED ON THE 6-MONTH STORM.
3. STACK GRAVEL BAGS DOUBLE HIGH. PROVIDE GAP FOR DRAINAGE.

CITY OF O'FALLON ENGINEERING DEPARTMENT O'FALLON, MISSOURI

CURB INLET PROTECTION

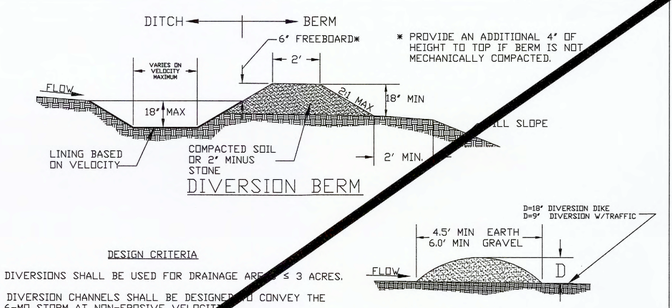

DIVERSION BERM

DIVERSION DIKE

DESIGN CRITERIA

1. DIVERSIONS SHALL BE USED FOR DRAINAGE AREAS ≤ 3 ACRES.
2. DIVERSION CHANNELS SHALL BE DESIGNED TO CONVEY THE 6-MO STORM AT NON-EROSIVE VELOCITIES.
3. CRITICAL LOCATIONS SHALL BE DESIGNED FOR THE 15YR / 20Min. STORM.
4. MAXIMUM CHANNEL SLOPE IS 3% WITHOUT CHECK DAMS.
5. SWALE SEDIMENT TRAPS ARE TO BE USED IN HIGHLY EROSIVE AREAS.
6. CHANNELS SHALL BE PROTECTED USING APPROPRIATE CHANNEL LINERS.
7. CHANNEL OUTLETS MUST BE STABILIZED.
8. STORM SEWERS MAY BE USED IN LIEU OF OPEN CHANNELS.

CITY OF O'FALLON ENGINEERING DEPARTMENT O'FALLON, MISSOURI

DIVERSION BERMS + DIKES

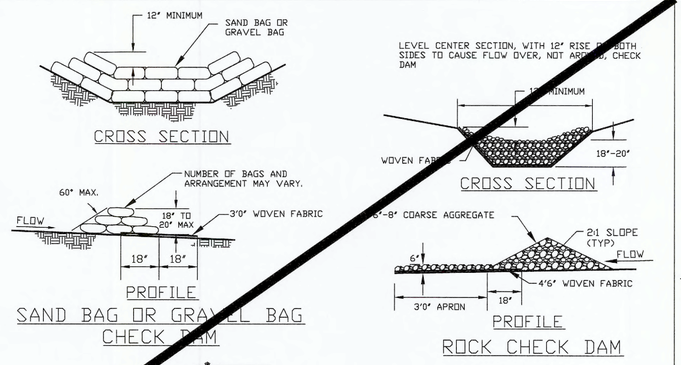

GRAVEL BAG

NOTE:
1. CHECK DAMS MAY BE CONSTRUCTED OF SEVERAL ESC CHECK DAM PRODUCTS.
2. SEE TABLE 60-12 AND ESC 1 FOR CHECK DAM SPACING.

CITY OF O'FALLON ENGINEERING DEPARTMENT O'FALLON, MISSOURI

CHECK DAMS

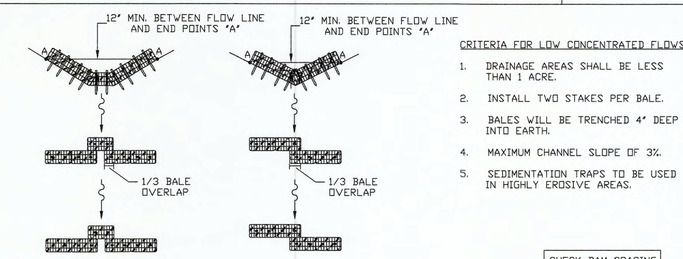

TRAPEZOIDAL DITCH

V-DITCH

CRITERIA FOR LOW CONCENTRATED FLOWS

1. DRAINAGE AREAS SHALL BE LESS THAN 1 ACRE.
2. INSTALL TWO STAKES PER BALE.
3. BALES WILL BE TRENCHED 4" DEEP INTO EARTH.
4. MAXIMUM CHANNEL SLOPE OF 3%.
5. SEDIMENTATION TRAPS TO BE USED IN HIGHLY EROSIVE AREAS.

CHECK DAM SPACING

Ditch Slope	Maximum Spacing
3%	50%
2%	75%

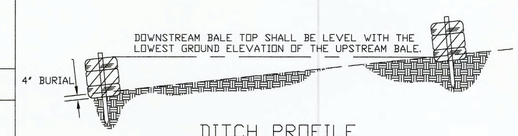

DITCH PROFILE

CITY OF O'FALLON ENGINEERING DEPARTMENT O'FALLON, MISSOURI

STRAW BALE CHECK DAM

CRITERIA

1. EXCAVATE TRENCH THE WIDTH OF THE BALE AT LEAST 4 INCHES DEEP AND LONG ENOUGH THAT THE END BALES ARE SOMEWHAT UPSLOPE.
2. REFER TO STRAW BALE CHECK DAM DETAIL FOR SPACING AND STRAW BALE USES AS DITCH CHECKS.
3. UPSLOPE FACE OF BALE MUST BE AT LEAST 5' FROM A DISTURBED EMBANKMENT.

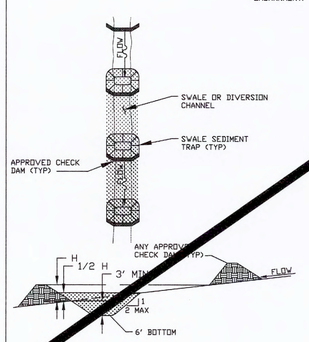

DITCH PROFILE

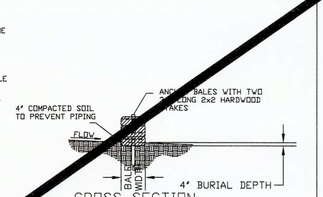

CROSS-SECTION

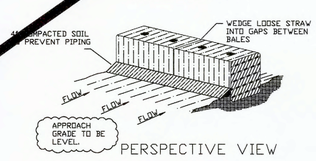

PERSPECTIVE VIEW

CITY OF O'FALLON ENGINEERING DEPARTMENT O'FALLON, MISSOURI

SWALE SEDIMENT TRAP STRAW BALE BARRIER INSTALLATION

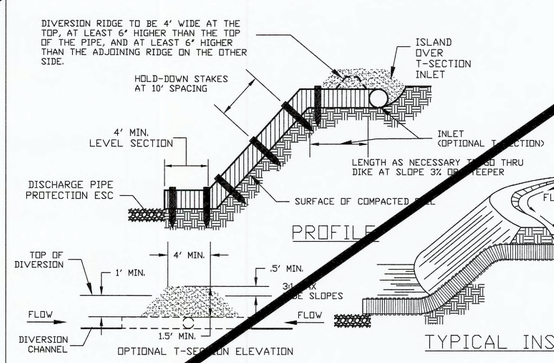

SLOPE DRAIN SIZE

Drainage Area (ac)	Pipe Dia.
< 1.0	12"
< 2.5	15"
< 3.0	18"
< 4.0	21"
< 5.0	24"
< 6.5	27"
6.5-10	30"

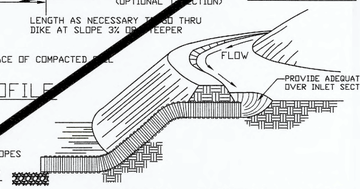

TYPICAL INSTALLATION

NOTE:
1. PIPE CAN BE CMP, PVC, FLEXIBLE TUBING, OR SIMILAR.
2. THIS METHOD MUST BE USED IN CONJUNCTION WITH OTHER ESC DEVICES. THIS IS NOT A STAND ALONE CONTROL DEVICE.

CITY OF O'FALLON ENGINEERING DEPARTMENT O'FALLON, MISSOURI

TEMPORARY SLOPE DRAIN

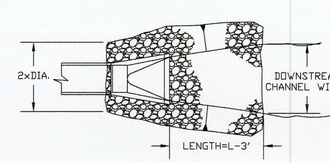

PLAN VIEW
W/FLARED END SECTION

RIPRAP SIZE & APRON DIMENSION

PIPE SIZE	VELOCITY < 5 FPS				VELOCITY < 10 FPS			
	ROCK SIZE		APRON DIM		ROCK SIZE		APRON DIM	
	d50	dMax	T	L	d50	dMax	T	L
(inch)	(inch)	(inch)	(inch)	(ft)	(inch)	(inch)	(inch)	(ft)
12	5	9	15	12	5	9	15	[illegible]
15	5	9	15	14	5	9	15	18
18-24	5	9	15	16	9	14	[illegible]	20
27-30	9	9	15	18	9	[illegible]	24	22
36-42	9	14	24	22	15	18	27	26
48-54	9	14	24	26	[illegible]	18	27	30
60-66	12	18	27	[illegible]	15	24	30	38
72-84	15	24	30	42	15	24	30	46
96	18	27	[illegible]	50	18	27	30	54

d50 - NOMINAL DIAMETER
dMax - MAXIMUM DIAMETER
T - THICKNESS
L - LENGTH

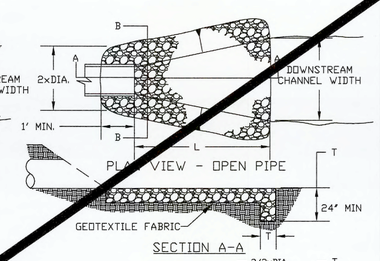

PLAN VIEW - OPEN PIPE

SECTION A-A

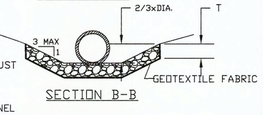

SECTION B-B

DESIGN CRITERIA

1. FROUDE NUMBER MUST BE ≤ 2.50.
2. USE 3 TIMES PIPE DIAMETER FOR DOWNSTREAM CHANNEL WIDTH IF THERE IS NO DEFINED CHANNEL.
3. BANK PROTECTION HEIGHT TO BE 2/3 TIMES PIPE DIAMETER.
4. ROCK SLOPES SHALL BE NO STEEPER THAN 3:1.

CITY OF O'FALLON ENGINEERING DEPARTMENT O'FALLON, MISSOURI

TEMPORARY OUTLET PIPE DISCHARGE PROTECTION

AS-BUILT WATERLINE PLAN

PROJECT TITLE:
EL TIO PEPE MEXICAN RESTAURANT

315 WEST TERRA LANE O'FALLON, ST. CHARLES, MISSOURI 63366

Bax Project # 97-635A | Issue Date: 04/12/2017

ENGINEERING PLANNING SURVEYING
2221 Point West Blvd.
St. Charles, MO 63301
636-928-5582
FAX 928-1718

DISCLAIMER OF RESPONSIBILITY
I hereby specify that the documents intended to be authenticated by my seal are limited to this sheet, and I hereby disclaim any responsibility for all other Drawings, Specifications, Estimates, Reports or other documents or instruments relating to or intended to be used for any part or parts of the architectural or engineering project or survey.

REFERENCE DRAWING

REVISIONS

09/19/17	CITY COMMENTS
10/04/17	CITY COMMENTS
08/08/19	AS-BUILT PLANS

Developer / Owner:
WR HOLMAN, LLC
2 HICKORY HILL DRIVE
O'FALLON, MISSOURI 63366
(636) 734-1815

EROSION CONTROL DETAILS

P+Z No. 33-14.01

CUP No. 33-14.01.01

LAST SAVED:8/8/2019 BY:TNYERS LAST PLOTD:8/8/2019 BY:TONY MYERS
FILE LOCATION:\\VAULTSERVER\CIVIL 3D PROJECTS\635A 315 WEST TERRA\SURVEY\ASBUILTS\97-635A CONTRACTOR ONLY AB FIRE LINE AND SEWER 4-1-19.DWG

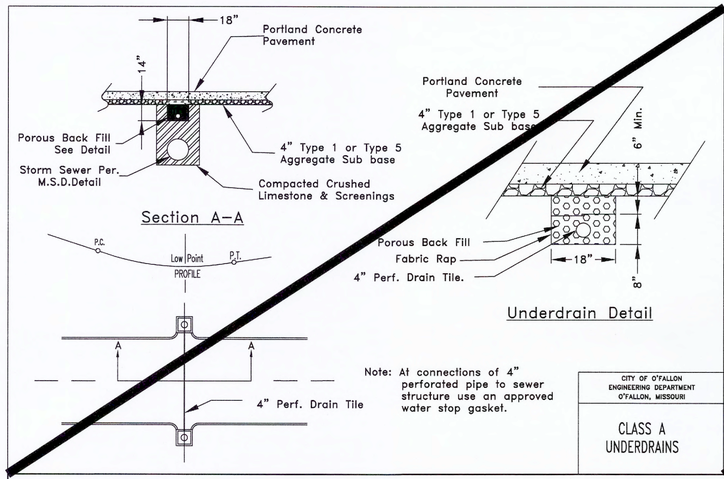

Note: At connections of 4" perforated pipe to sewer structure use an approved water stop gasket.

CITY OF O'FALLON
ENGINEERING DEPARTMENT
O'FALLON, MISSOURI

CLASS A UNDERDRAINS

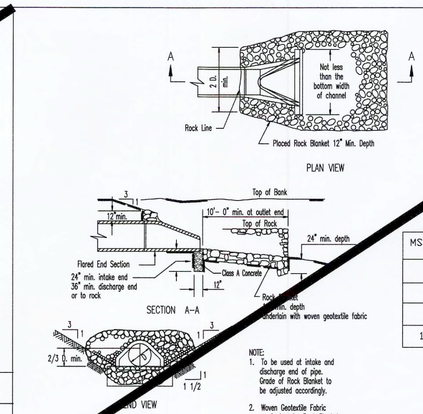

* The discharge point of all flared end sections shall be protected by rip rap or other approved means.

** Rip rap shown at flared end sections will be evaluated in the field by the Engineer, Contractor, and City Inspectors after installation for effectiveness and field modified, if necessary to reduce erosion on and off site.

MSD Type 5 Rock Blanket (% By Weight Passing)		
Sieve	Maximum	Minimum
12 inch	90	70
6 inch	30	10
1/2 inch	5	0

NOTE:
1. To be used at intake and discharge end of pipe. Grade of Rock Blanket to be adjusted accordingly.
2. Woven Geotextile Fabric required under Rock Blanket.

CITY OF O'FALLON
ENGINEERING DEPARTMENT
O'FALLON, MISSOURI

SEWER CONSTRUCTION DETAILS
FLARED END SECTION
(INLET/OUTLET PROTECTION)

* The City of O'Fallon must be provided with a symbol/medallion for review and approval prior to installation. Contact the City if any information is needed.

Size	Style	Adhesive	Message (Part #)
3 7/8" TO 4"	Crystal Cap or Standard Style	Epoxy	No Dumping Drains to Waterway

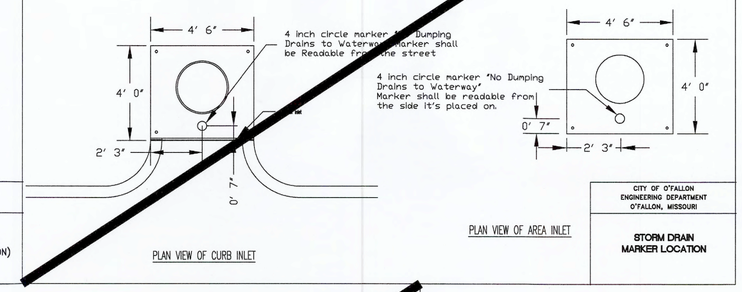

CITY OF O'FALLON
ENGINEERING DEPARTMENT
O'FALLON, MISSOURI

STORM DRAIN MARKER LOCATION

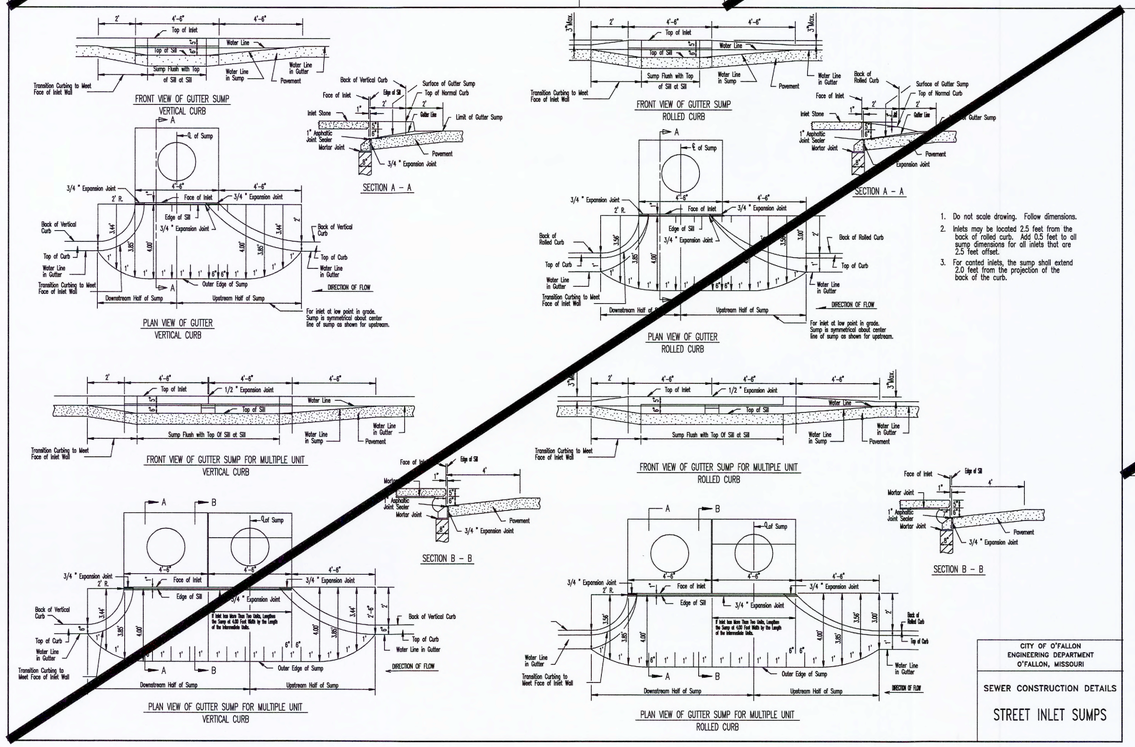

1. Do not scale drawing. Follow dimensions.
2. Inlets may be located 2.5 feet from the back of rolled curb. Add 0.5 feet to all sump dimensions for all inlets that are 2.5 feet offset.
3. For canted inlets, the sump shall extend 2.0 feet from the projection of the back of the curb.

CITY OF O'FALLON
ENGINEERING DEPARTMENT
O'FALLON, MISSOURI

SEWER CONSTRUCTION DETAILS

STREET INLET SUMPS

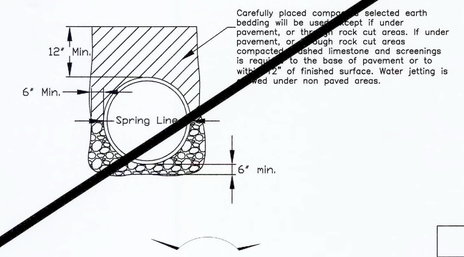

Carefully placed compacted selected earth bedding will be used except if under pavement, or through rock cut areas. If under pavement, or through rock cut areas compacted crushed limestone and screenings is required to the base of pavement or to within 12" of finished surface. Water jetting is allowed under non paved areas.

CITY OF O'FALLON
ENGINEERING DEPARTMENT
O'FALLON, MISSOURI

TRENCH DETAIL

* All other Storm or Sanitary Sewer Details will be by M.S.D. 2007 Standards and Specifications.

City of O'Fallon Standard Subdivision Notes and Details – June 2010

AS-BUILT WATERLINE PLAN

PROJECT TITLE:
EL TIO PEPE MEXICAN RESTAURANT

315 WEST TERRA LANE
O'FALLON, ST. CHARLES, MISSOURI 63366

Bax Project # 97-335A, Issue Date: 04/12/2017

ENGINEERING ARCHITECTURE SURVEYING
221 Point West Blvd.
St. Charles, MO 63301
636-928-5662
FAX 928-1718

DISCLAIMER OF RESPONSIBILITY
I hereby specify that the documents intended to be authenticated by my seal are limited to this sheet, and I hereby disclaim any responsibility for all other Drawings, Specifications, Estimates, Reports or other documents or instruments relating to or intended to be used for any or parts of the architectural or engineering project or survey.

REFERENCE DRAWING

REVISIONS

09/19/17	CITY COMMENTS
10/04/17	CITY COMMENTS
08/08/19	AS-BUILT PLANS

Developer / Owner:
WR HOLMAN, LLC
2 HICKORY HILL DRIVE
O'FALLON, MISSOURI 63366
(636) 734-1815

STORM SEWER DETAILS

P+Z No. 33-14.01

CUP No. 33-14.01.01

Page No. 9 of 18

LAST SAVED:8/8/2019 BY:TMYERS LAST PLOT:8/8/2019 BY:TONY MYERS
FILE LOCATION:\\VAULTSERVER\CIVIL 3D PROJECTS\335A 315 WEST TERRA\SURVEY\ASBUILTS\97-335A CONTRACTOR ONLY AB FIRE LINE AND SEWER 4-1-19.DWG

BENDS	"B"	"C"	"D"	"E"	"F"
6"-11 1/4°	8"	15"	12"	24"	10"
6"-22 1/2°	8"	19"	12"	24"	13"
6"-45°	8"	30"	12"	24"	15"
6"-90°	8"	30"	12"	24"	28"
8"-11 1/4°	8"	20"	12"	24"	10"
8"-22 1/2°	8"	22"	12"	24"	18"
8"-45°	8"	31"	12"	24"	24"
8"-90°	8"	38"	12"	24"	36"
12"-11 1/4°	8"	30"	12"	24"	15"
12"-22 1/2°	8"	35"	12"	24"	25"
12"-45°	8"	40"	12"	24"	40"
12"-90°	8"	60"	12"	24"	52"
16"-11 1/4°	TL	28"	20"	24"	28"
16"-22 1/2°	TL	39"	20"	24"	39"
16"-45°	TL	55"	20"	24"	55"
16"-90°	TL	91"	20"	24"	60"
20"-11 1/4°	TL	34"	24"	26"	28"
20"-22 1/2°	TL	48"	24"	26"	39"
20"-45°	TL	74"	24"	26"	55"
20"-90°	TL	136"	24"	26"	60"
24"-11 1/4°	TL	40"	28"	28"	40"
24"-22 1/2°	TL	56"	28"	28"	56"
24"-45°	TL	101"	28"	28"	60"
24"-90°	TL	186"	28"	28"	60"
30"-11 1/4°	TL	49"	34"	30"	49"
30"-22 1/2°	TL	79"	34"	30"	60"
30"-45°	TL	154"	34"	30"	60"
30"-90°	TL	285"	34"	30"	60"

TEES	"G"	"H"	"J"	"K"
6"X6"X6"	12"	24"	24"	18"
8"X8"X6"	12"	24"	24"	18"
8"X8"X8"	12"	27"	24"	27"
12"X12"X6"	12"	24"	24"	18"
12"X12"X8"	12"	27"	27"	27"
12"X12"X12"	12"	38"	24"	38"
24"X24"X16"	16"	53"	28"	53"

NOTES:
1. 2"& 4" FITTINGS EQUIVALENT TO 6" FITTINGS.
2. TAPPING SLEEVES TO HAVE BACKING BLOCKS SAME SIZE AS REQUIRED FOR TEES.
3. "TL" = TOTAL LENGTH OF FITTING MINUS CLEARANCE FOR BELLS.

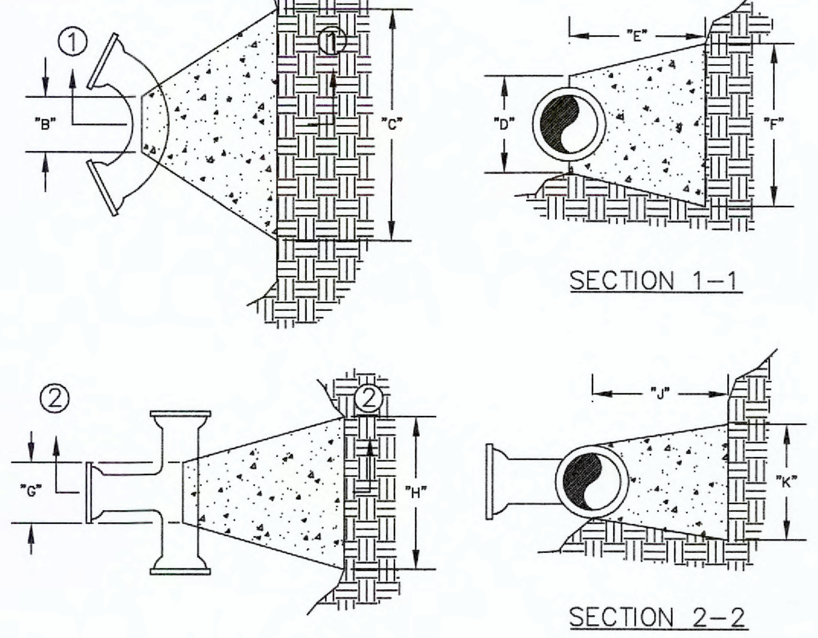

INTERNAL WATER PRESSURE 6" through 12"=200 psi
INTERNAL WATER PRESSURE 16" through 30"=210 psi
BEARING PRESSURE OF SOIL=2000 psi

BACKING BLOCKS

NOT TO SCALE

CITY OF O'FALLON
ENGINEERING DEPARTMENT
O'FALLON, MISSOURI

BACKING BLOCK
DETAILS AND LOCATIONS

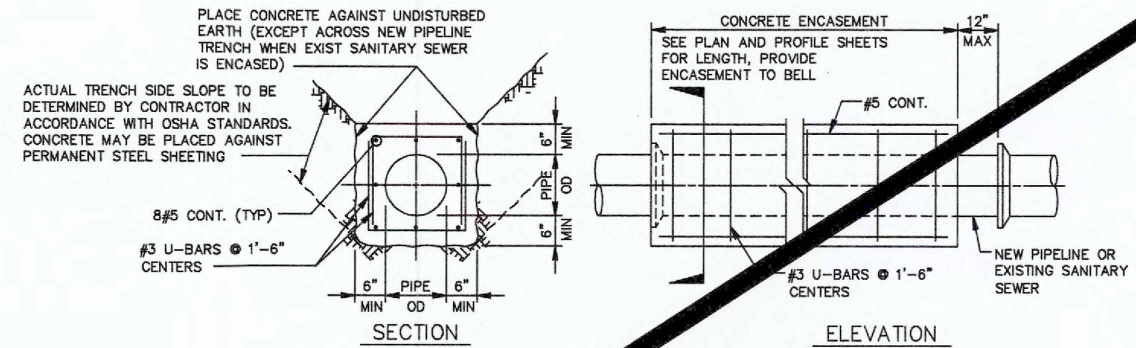

NOTES:
1. AT LOCATIONS WHERE THE TRANSMISSION MAIN CROSSES AN EXIST SANITARY SEWER, SEE SPECIFICATIONS FOR ADDITIONAL REQUIREMENTS.
2. WHEN THE PIPELINE IS PROTECTED WITH POLYETHYLENE TUBE ENCASEMENT, THE CONCRETE ENCASEMENT IS TO COVER THE POLYETHYLENE ENCASEMENT.

CONCRETE ENCASEMENT

NO SCALE

CITY OF O'FALLON
ENGINEERING DEPARTMENT
O'FALLON, MISSOURI

CONCRETE ENCASEMENT
DETAILS

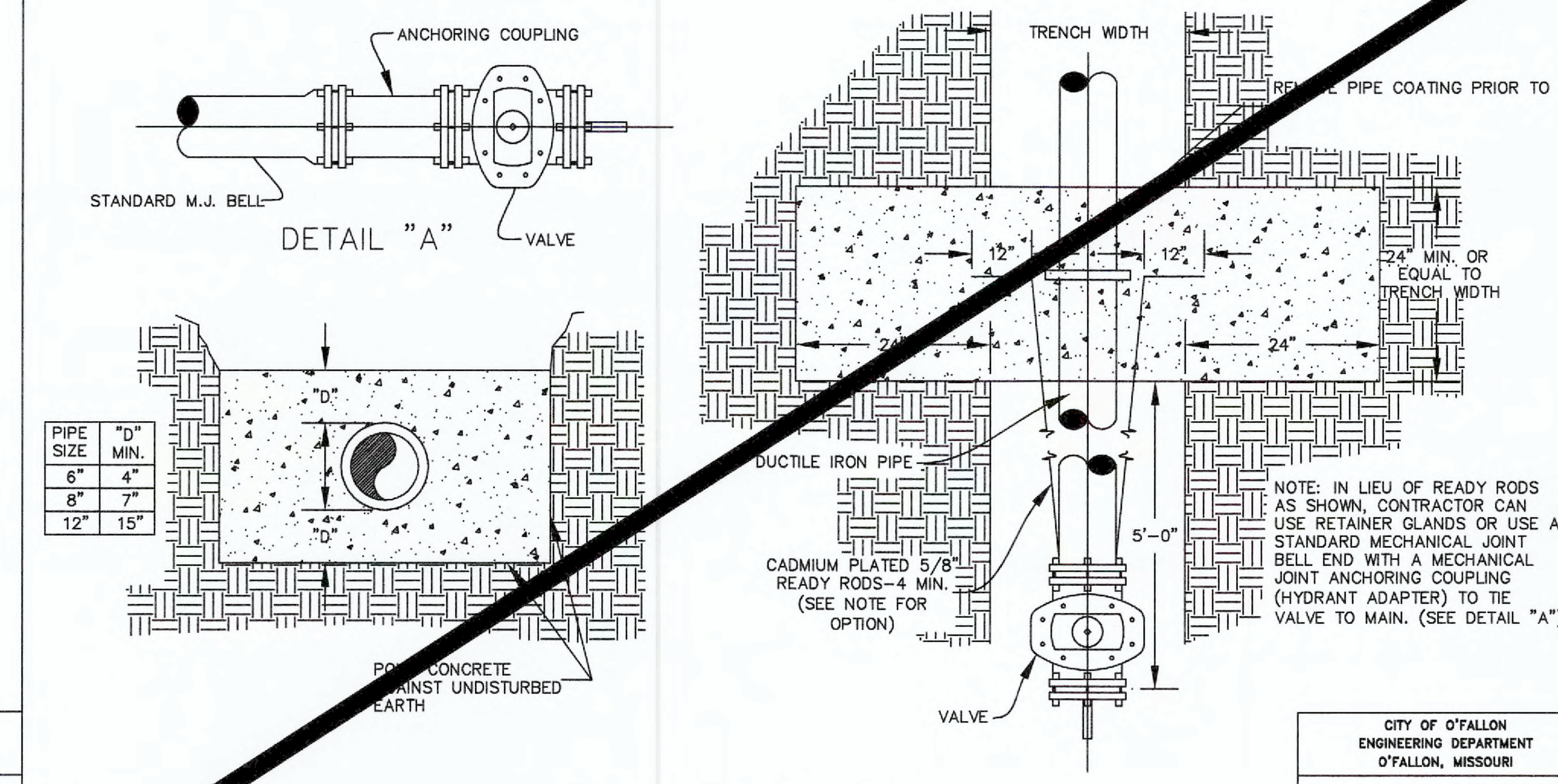

STRADDLE BLOCK DETAIL

NOT TO SCALE

CITY OF O'FALLON
ENGINEERING DEPARTMENT
O'FALLON, MISSOURI

STRADDLE BLOCK
DETAILS

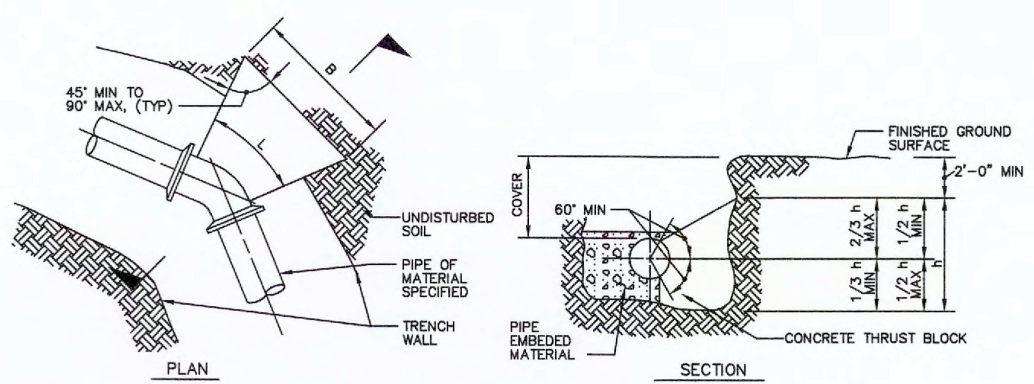

NOTES:
1. AREA OF BLOCK, A = Bxh. BLOCK AREAS ARE SHOWN ON GENERAL LAYOUT OR TABLE.
2. B = h = $\sqrt{A}$, EXCEPT WHERE TOP OF BLOCK IS WITHIN 2 FEET FROM GROUND SURFACE, THEN B = A/h.
3. MINIMUM BLOCK DIMENSION (B & h) SHALL BE AT LEAST OD OF PIPE OR 1 FOOT FOR PIPE OD 12" OR LESS.
4. THE BOTTOM OF THE BLOCK SHALL EXTEND AT LEAST TO THE BOTTOM OF THE TRENCH IN ALL CASES.
5. L=FITTING LENGTH MINUS CLEARANCE FOR BELLS.
6. DETAIL IS SHOWN FOR CAST IRON PIPE; DETAIL IS SIMILAR FOR OTHER TYPES OF PIPE.
7. DIMENSIONS FOR THRUST BLOCKS FOR FIRE HYDRANT ASSEMBLY ARE SHOWN FIRE HYDRANT ASSEMBLY DETAIL.

SIZE	BEND	THRUST AREA	B	H
16"	11 1/2° 22 1/2°	4 SF	2'	2'
16"	45°	8 SF	2.8'	2.8'

CONCRETE THRUST BLOCKING

NOT TO SCALE

CITY OF O'FALLON
ENGINEERING DEPARTMENT
O'FALLON, MISSOURI

CONCRETE THRUST
BLOCKING DETAILS

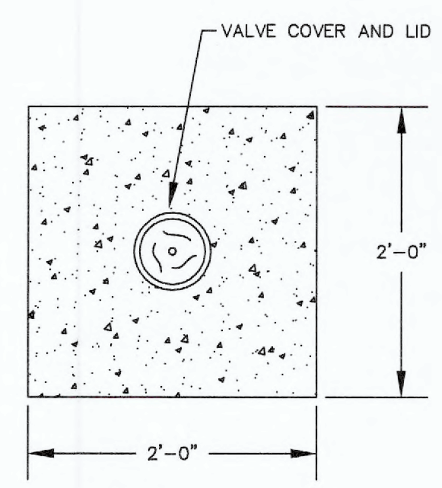

TOP VIEW
CONCRETE COLLAR

NOT TO SCALE

Note : 1. Concrete collar joint pateren is required in paved areas such as roadways, driveways, sidewalks or other areas of paved surfaces.
2. Concrete collars are optional in other non-paved areas.

CITY OF O'FALLON
ENGINEERING DEPARTMENT
O'FALLON, MISSOURI

CONCRETE
COLLAR DETAIL

Concrete collar will be in accordance will the Concrete collar detail.

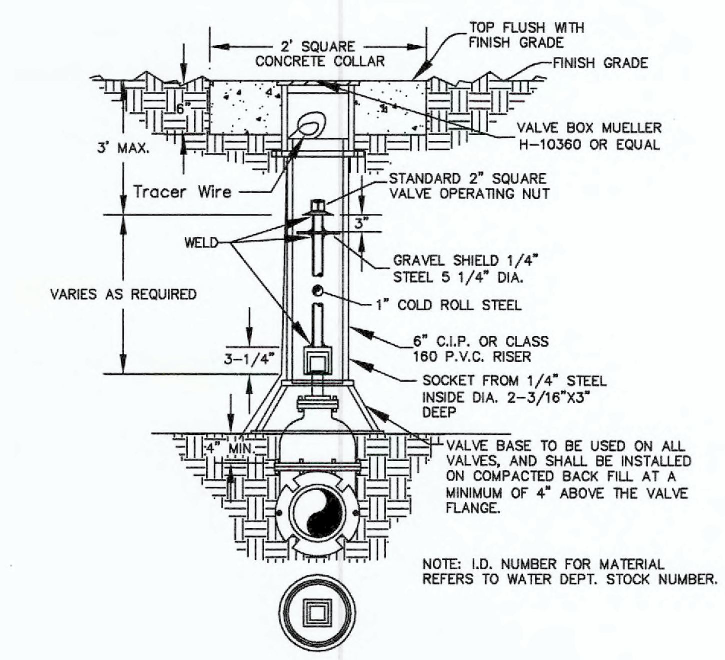

WATER VALVE DETAIL

NOT TO SCALE

CITY OF O'FALLON
ENGINEERING DEPARTMENT
O'FALLON, MISSOURI

WATER
VALVE DETAIL

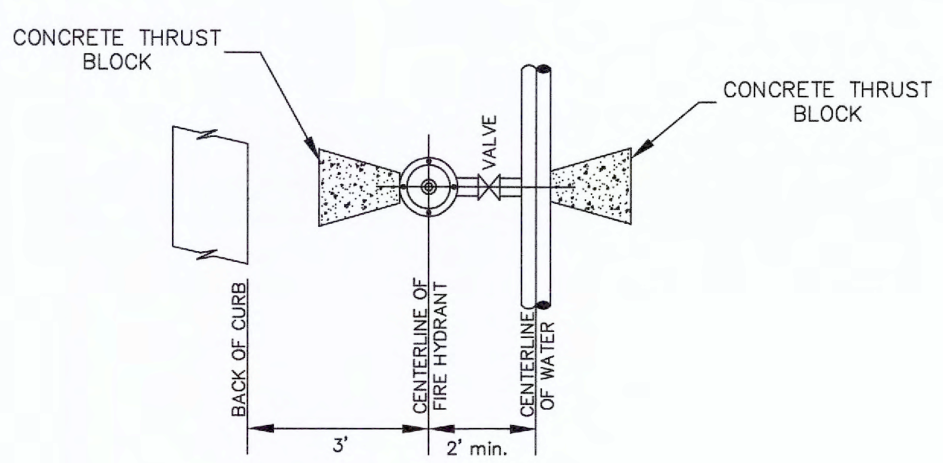

CONFIGURATION

ALL FIRE HYDRANTS SHALL BE 3' OFF BACK OF CURB
ALL WATER MAINS SHALL BE A MIN. OF 5' OFF BACK OF CURB

TYPICAL WATER MAIN AND FIRE HYDRANT LOCATIONS

NOT TO SCALE

CITY OF O'FALLON
ENGINEERING DEPARTMENT
O'FALLON, MISSOURI

WATER MAIN
FIRE HYDRANT DETAIL

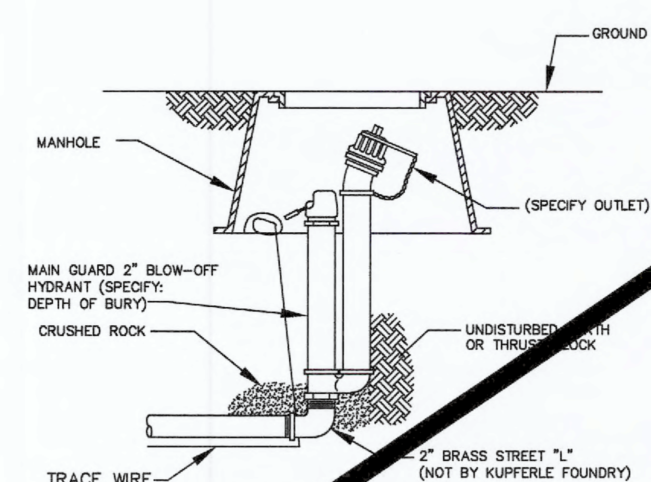

BLOW-OFF HYDRANTS SHALL BE NONFREEZING, SELF DRAINING TYPE, WITH AN OVERALL LENGTH OF 2 '. SET UNDERGROUND IN A METER BOX. THESE HYDRANTS WILL BE FURNISHED WITH A 2" FIP INLET, A NON-TURNING OPERATING ROD, AND SHALL OPEN TO THE LEFT. ALL OF THE WORKING PARTS SHALL BE OF BRONZE-TO BRONZE DESIGN AND BE SERVICEABLE FROM ABOVE GRADE WITH NO DIGGING. THE OUTLET SHALL ALSO BE BRONZE AND BE 2-1/2" NST. HYDRANTS SHALL BE LOCKABLE TO PREVENT UNAUTHORIZED USE AS MANUFACTURED BY KUPFERLE FOUNDRY CO., ST. LOUIS, MO, OR APPROVED EQUAL.

(SPECIFY OVERALL LENGTH 6" SHORTER THAN NORMAL DEPTH OF BURY. MINIMUM OPENING IN METER BOX SHOULD BE 10".)

BLOW-OFF HYDRANT

NOT TO SCALE

CITY OF O'FALLON
ENGINEERING DEPARTMENT
O'FALLON, MISSOURI

BLOW-OFF
HYDRANT DETAIL

City of O'Fallon Standard Subdivision Notes and Details - June 2010

AS-BUILT WATERLINE PLAN

PROJECT TITLE:
EL TIO PEPE MEXICAN RESTAURANT
315 WEST TERRA LANE
O'FALLON, ST. CHARLES, MISSOURI 63366

Bax Project #97-9351A | Issue Date: 04/12/2017

ENGINEERING
PLANNING
SURVEYING
221 Point West Blvd.
St. Charles, MO 63301
636-928-5552
FAX 928-1718

DISCLAIMER OF RESPONSIBILITY
I hereby specify that the documents intended to be authenticated by my seal are limited to this sheet, and I hereby disclaim any responsibility for all other Drawings, Specifications, Estimates, Reports or other documents or instruments relating to or intended to be used for any part or parts of the architectural or engineering project or survey.

REFERENCE DRAWING

REVISIONS

09/19/17	CITY COMMENTS
10/04/17	CITY COMMENTS
08/08/19	AS-BUILT PLANS

Developer / Owner:
WR HOLMAN, LLC
2 HICKORY HILL DRIVE
O'FALLON, MISSOURI 63366
(636) 734-1815

WATER SERVICE DETAILS

P+Z No.
33-14.01

CUP No.
33-14.01.01

Page No.

LAST SAVE:8/8/2019 BY:TMYERS LAST PLOT: 8/8/2019 BY:TONY MYERS
FILE LOCATION: \\VAULTSERVER\CIVIL 3D PROJECTS\9351A 315 WEST TERRA\SURVEY\ASBUILTS\97-9351A CONTRACTOR ONLY AB FIRE LINE AND SEWER 4-1-19.DWG

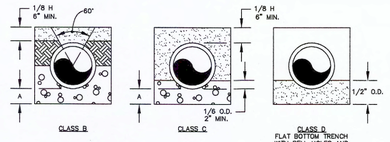

LEGEND
I.D. – NOMINAL PIPE SIZE
O.D. – OUTSIDE DIAMETER OF PIPE
H – COVER ABOVE TOP OF PIPE
A – EMBEDED BELOW PIPE (SEE TABLE)

TAMPED BACK FILL
COMPACTED BACK FILL
GRANULAR BEDDING

TABLE OF EMBEDED DEPTHS BELOW PIPE

I.D.	A MIN. SOIL	A MIN. ROCK
27" & SMALLER	3"	6"

GRANULAR BEDDING SHALL BE CRUSHED ROCK OR PEA GRAVEL WITH NOT LESS THAN 95% PASSING 1/2" (95% PASSING 3/4" FOR 30" AND LARGER PIPE) AND NOT LESS THAN 95% RETAINED ON A #4. TO BE PLACED IN NOT MORE THAN 6" LAYERS AND COMPACTED BY SLICING WITH A SHOVEL OR VIBRATING.

COMPACTED BACK FILL SHALL BE FINELY DIVIDED JOB EXCAVATED MATERIAL FREE FROM DEBRIS, ORGANIC MATERIAL AND STONES, PLACED IN UNIFORM LAYERS NOT MORE THAN 6" THICK, COMPACTED TO 95% MAXIMUM DENSITY AS DETERMINED BY A.S.T.M. D698, OR GRADED AGGREGATE. GRANULAR BACK FILL MATERIAL MAY BE SUBSTITUTED FOR ALL OR PART OF COMPACTED BACK FILL.

TAMPED BACK FILL SHALL BE FINELY DIVIDED JOB EXCAVATED MATERIAL FREE FROM DEBRIS, ORGANIC MATERIAL AND STONES, HAND PLACED IN UNIFORM LAYERS NOT MORE THAN 8" THICK AND TAMPED AROUND CONDUIT PIPE. GRANULAR BACK FILL MATERIAL MAY BE SUBSTITUTED FOR ALL OR PART OF TAMPED BACK FILL.

TRENCH BACK FILL SHALL BE AS REQUIRED IN THE "LAYING AND BACK FILL" SECTION OF THE DETAILED SPECIFICATIONS.

EMBEDED THE TYPE OF EMBEDED TO BE USED SHALL BE AS SPECIFIED IN THE PLANS AND SPECIFICATIONS.

TRACER WIRE REQUIRED ON ALL WATER MAINS

WATER MAIN EMBEDED

NOT TO SCALE

CITY OF O'FALLON
ENGINEERING DEPARTMENT
O'FALLON, MISSOURI

WATER MAIN EMBEDED

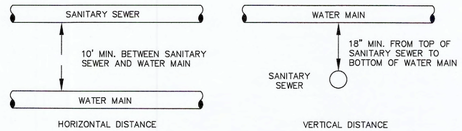

TYPICAL WATER AND SEWER SEPARATION

NOT TO SCALE

CITY OF O'FALLON
ENGINEERING DEPARTMENT
O'FALLON, MISSOURI

WATER AND SEWER SEPARATION DETAIL

Note: Other connections such as anchor coupling are allowable with additional details and approval.

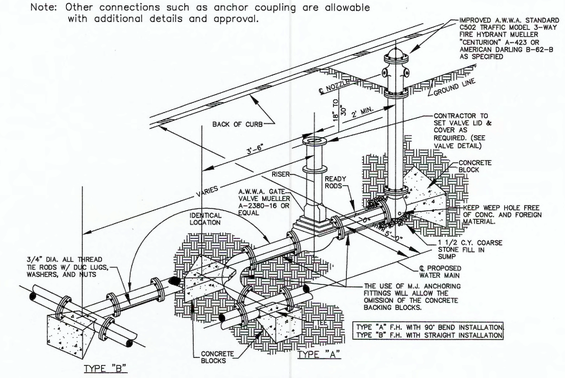

FIRE HYDRANT DETAIL

NOT TO SCALE

CITY OF O'FALLON
ENGINEERING DEPARTMENT
O'FALLON, MISSOURI

FIRE HYDRANT DETAILS

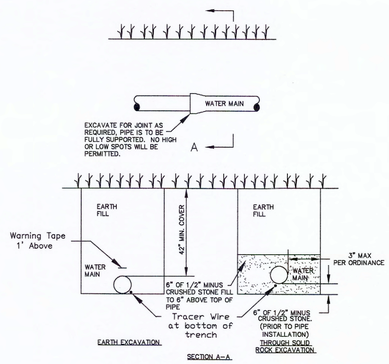

TYPICAL WATER MAIN INSTALLATION DETAILS

NOT TO SCALE

CITY OF O'FALLON
ENGINEERING DEPARTMENT
O'FALLON, MISSOURI

WATER MAIN INSTALLATION DETAIL

Ductile Iron Pipe installation shall follow the Ductile Iron Research Association (DIPRA) guide line.

The Installation of PVC Pipe shall follow the Uni–Bell PVC Pipe Association Handbook of PVC Design and Construction.

City of O'Fallon Standard Subdivision Notes and Details – June 2010

AS-BUILT WATERLINE PLAN

PROJECT TITLE:
EL TIO PEPE MEXICAN RESTAURANT

315 WEST TERRA LANE
O'FALLON, ST. CHARLES, MISSOURI 63366

Bax Project # 97-9351A | Issue Date: 04/12/2017

ENGINEERING
PLANNING
SURVEYING
221 Point West Blvd.
St. Charles, MO 63301
636-928-5662
FAX 928-1718

DISCLAIMER OF RESPONSIBILITY
I hereby specify that the documents intended to be authenticated by my seal are limited to this sheet, and I hereby disclaim any responsibility for all other Drawings, Specifications, Estimates, Reports or other documents or instruments relating to or intended to be used for any part or parts of the architectural or engineering project or survey.

REFERENCE DRAWING

REVISIONS

09/19/17	CITY COMMENTS
10/04/17	CITY COMMENTS
08/08/19	AS-BUILT PLANS

Developer / Owner:
WR HOLMAN, LLC
2 HICKORY HILL DRIVE
O'FALLON, MISSOURI 63366
(636) 734-1815

WATER SERVICE DETAILS

P+Z No.
33-14.01

CUP No.
33-14.01.01

LAST SAVE: 8/8/2019 BY: TMYERS
FILE LOCATION: \\VAULT\SERVER\CIVIL 3D PROJECTS\AS\A 315 WEST TERRA\SURVEY\ASBUILTS\97-9351A CONTRACTOR ONLY AS FIRE LINE AND SEWER 4-1-18.DWG
LAST PLOT: 8/8/2019 BY: TONY MYERS

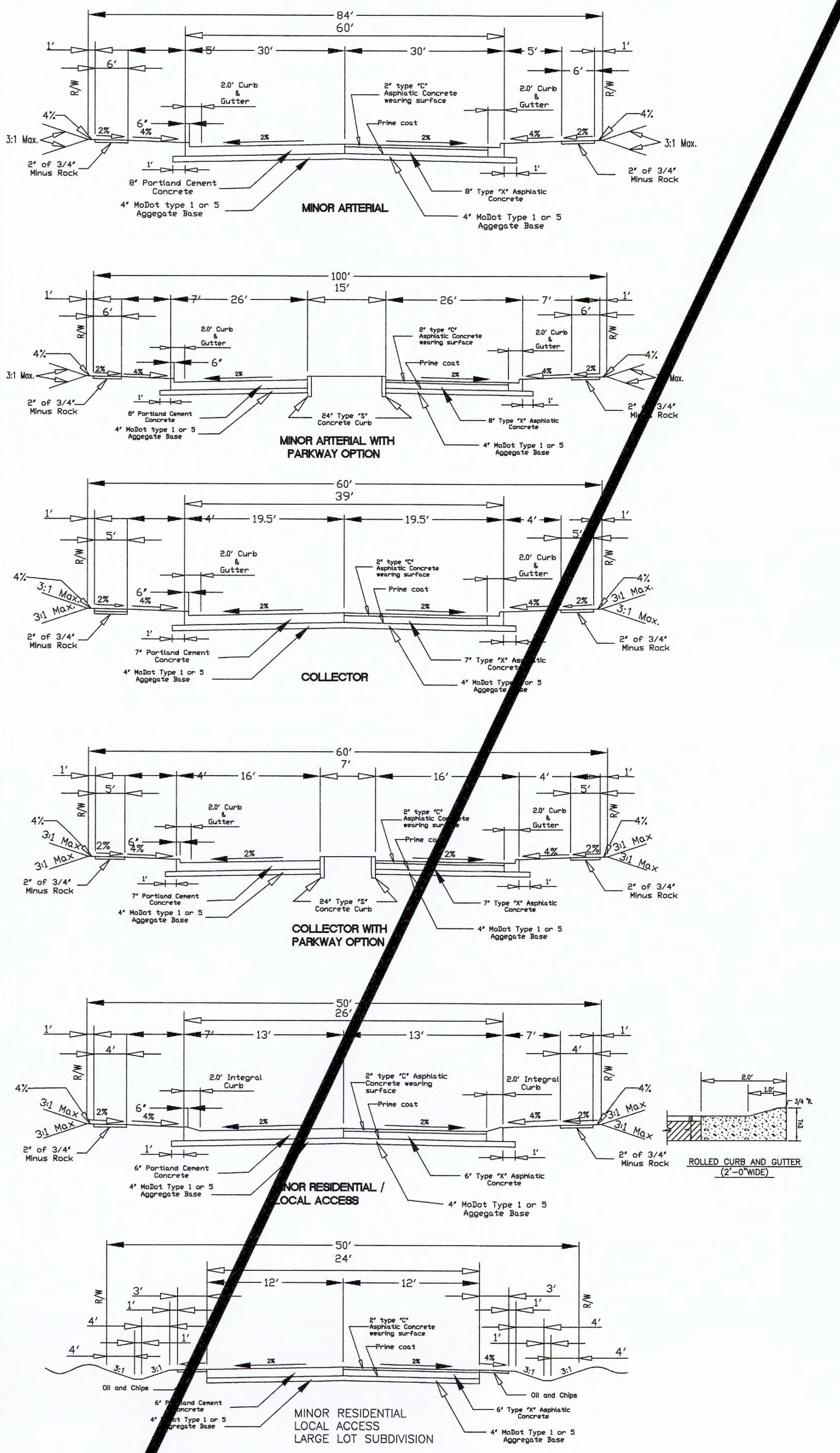

	ROW Width	Pavement Width	Lane Width	No. of Drive Lanes	Utility Easement	Design Speed
Minor Arterial	84	60	12	5	10	40
Collector	60	39	12	3	10	35
Residential Collector	56	32**	N/A	2	10	25
Minor Residential Local Access	50	26	N/A	2	10	25*

Notes: * = Can be varied with City Engineer's approval
** = Detail to match minor residential street with wider pavement
– these requirements may be varied by other City ordinances
– these standards are minimum standards
– Parkway options can be provided as indicated above

Designer will provide roadway cross section and joint locations in a seperate detail drawing.

CITY OF O'FALLON
ENGINEERING DEPARTMENT
O'FALLON, MISSOURI

Typical Pavement Design
SECTION NO. 405.370

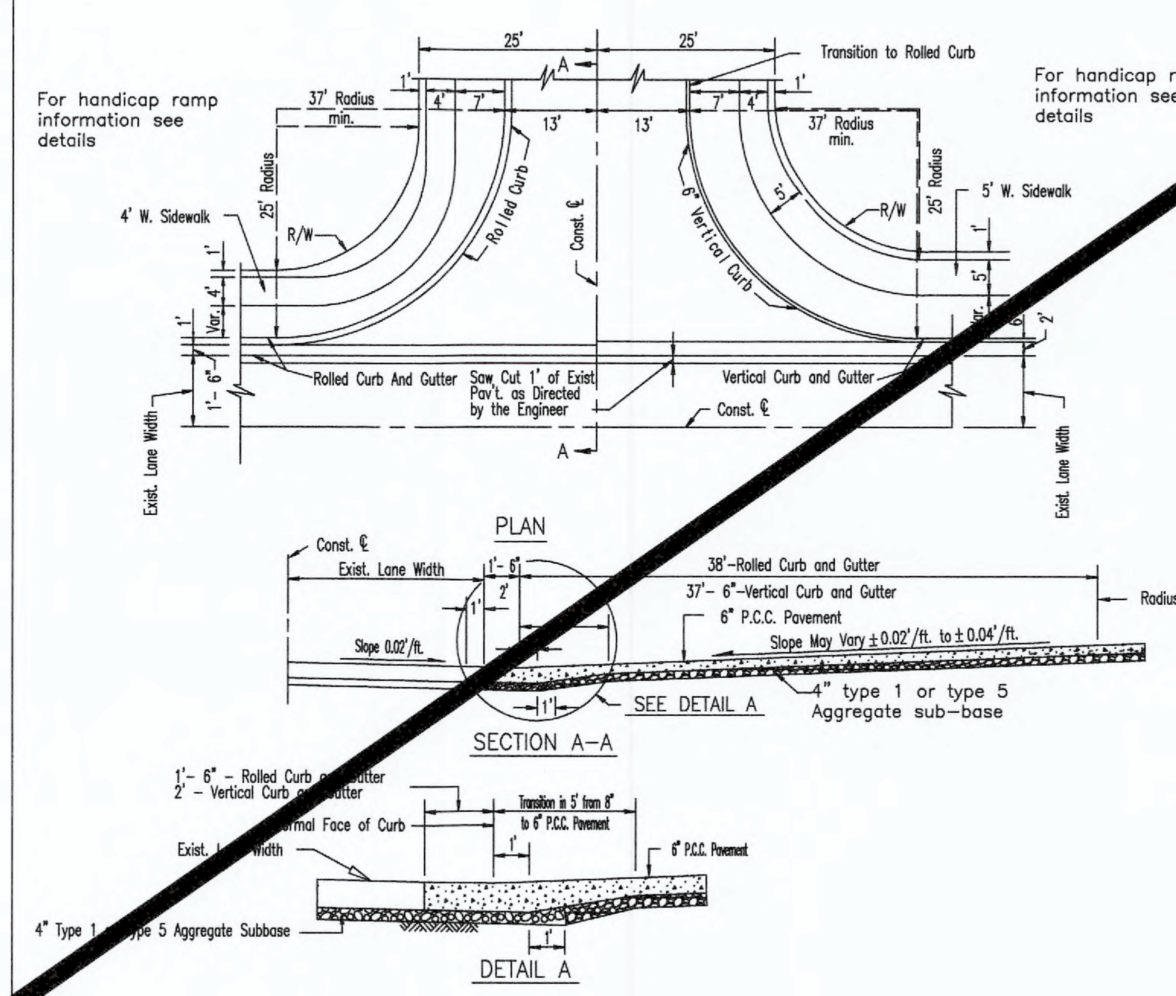

GENERAL NOTES

1. Do not scale drawing. Follow dimensions.
2. Sections are symmetrical about construction centerline.
3. For longitudinal and transverse joints, dowel and tie bar requirements and curb dimensions refer to the Pavement Construction Details for Joints and Curbs.
4. All necessary pavement markings shall be as required by City of O'Fallon.
5. For roadway cross slope, pavement types and thickness refer to "Standard Typical Sections."

CITY OF O'FALLON
ENGINEERING DEPARTMENT
O'FALLON, MISSOURI

PAVEMENT CONSTRUCTION DETAILS
STANDARD RESIDENTIAL STREET ENTRANCE

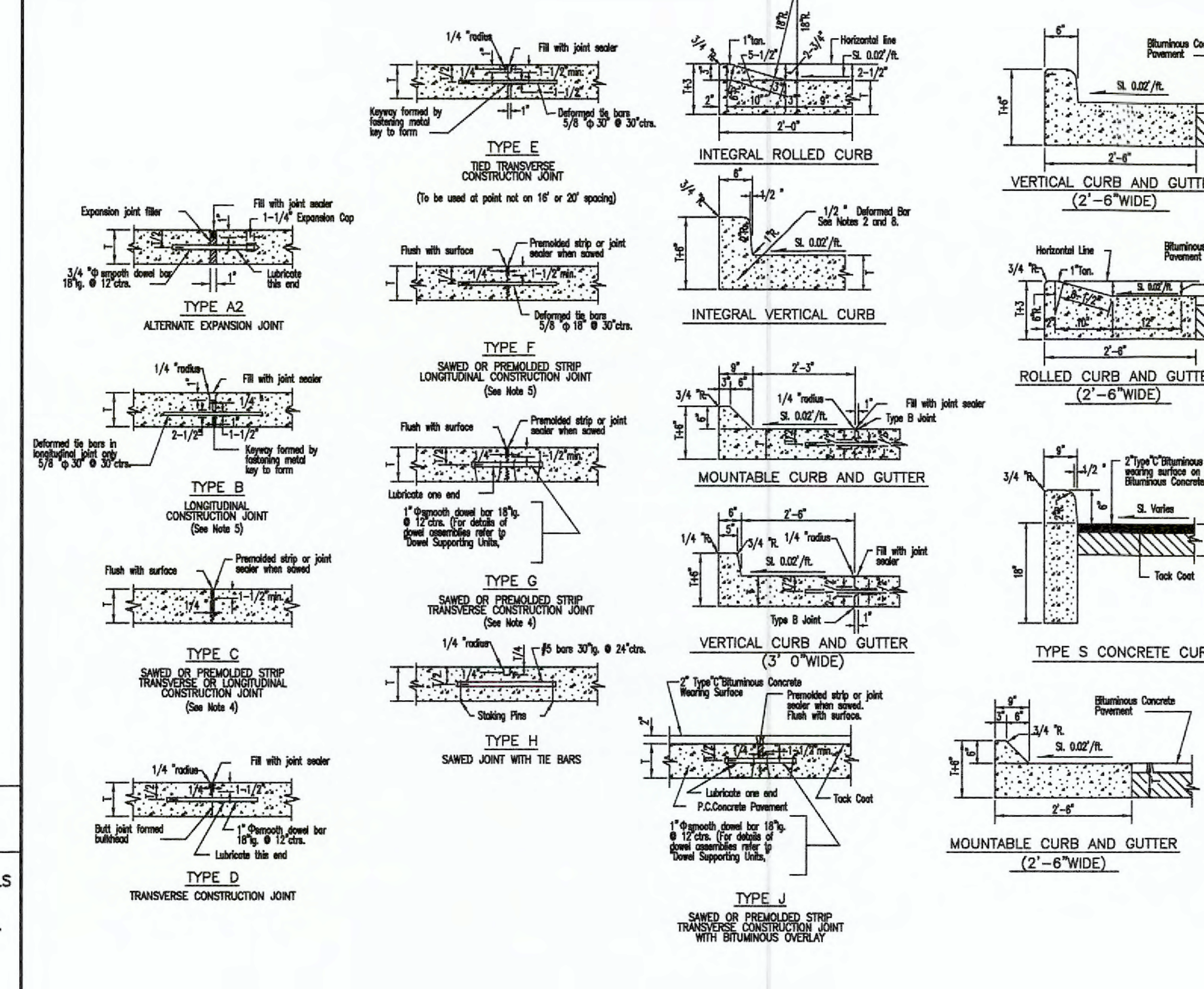

GENERAL NOTES

1. Do not scale drawing. Follow dimensions.
2. Construction joint and tie bars may be omitted when curb is poured integral with pavement.
3. Minimum Thickness for Pavement is:

	Concrete Pavement Thickness = (T)	Bituminous Concrete Pavement Thickness = (T)
All Residential Minor and Local Streets	6"	7-1/2"
Residential Collector and Non-Residential Streets	7"	9-1/2"
All Arterial Streets	8"	12"

4. Type "G" Transverse Joint is required for Arterial and Non-Residential streets. Use Type "C" Transverse Joint for all others.
5. For Subdivision or Minor Streets having 6" concrete pavement 1/2" Φ deformed tie bars 30" long at 30" centers shall be used for Type "B" Longitudinal Joints and 1/2" Φ deformed tie bars 18" long at 30" centers shall be used for Type "F" Longitudinal Joints.
6. Refer to Pavement Construction Details for "Integral Vertical Curb and Concrete Pavement Typical Sections and Details" and "Integral Rolled Curb and Concrete Pavement Typical Sections and Details" for joint and bar requirements for different street classifications. Note that width and location of each poured portion of the pavement may change the type and location of joint required.
7. All deformed bars for joints and curbs shall be Billet Steel Bars conforming to A.S.T.M.615-75, Grade 40.
8. Length of the tie bars shall equal the thickness of pavement plus the height of curb less 3". Tie bars shall be placed at 24" centers.
9. Transverse or longitudinal construction joints in slip formed pavements may be made with a groover or tool, if such device has been approved in advance by the Department.
10. The free end of the dowel bar for a length of at least 11 inches shall be coated with an approved graphite grease.
11. All dowel bars 18"lg. @ 12"ctrs. shall be epoxy coated.
12. Expansion joint A-2 from St. Louis County pavement construction details, shall be allowed in addition to Type A and AA expansion joints.

CITY OF O'FALLON
ENGINEERING DEPARTMENT
O'FALLON, MISSOURI

PAVEMENT CONSTRUCTION DETAILS
JOINTS AND CURBS

INTEGRAL VERTICAL CURB AND CONCRETE JOINT DETAILS

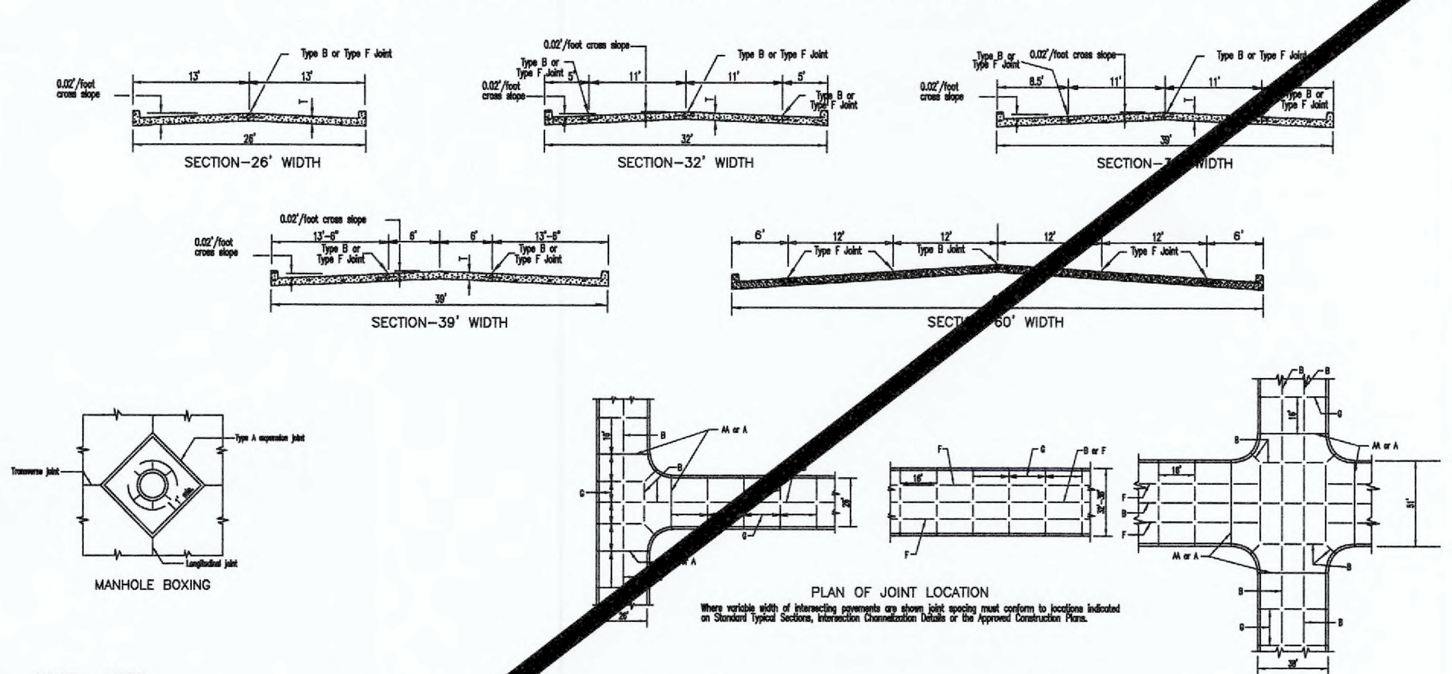

GENERAL NOTES

1. Do not scale drawing. Follow dimensions.
2. All street inlets shall be separated from the pavement and curb by expansion joint material extending completely through curb and slab. Manhole castings within the pavement limits shall be boxed as shown.
3. When a joint falls within 5ft. of, or contacts inlets, manholes, or other structures, shorten one or more panels either side of opening to permit joint to fall on round structures and at or between corners of rectangular structures.
4. Driveway configurations are shown in the "Entrance Construction Details."
5. Construction joint and tie bars may be omitted when curb is poured monolithic with pavement.
6. Minimum Thickness for Pavement is:

	PAVEMENT (T)
All Non-Residential Streets	7"
All Arterial Streets	

7. Refer to Pavement Construction Details for "Joints and Curbs" for joint and bar requirements. Note that width and location of each poured portion of the pavement may change the type and location of joints required.
8. The locations of the Type B and Type F longitudinal construction joints in the sections may be interchanged for different widths of construction if approved by the Department.
9. All 1" smooth dowel bars 18"lg. @ 12"ctrs. shall be epoxy coated.

NOTE
Joint filler material shall meet ASTM designations as follows:
Bituminous type .... ASTM D-994-53
Non extruding & resilient bituminous type (fiber) .... ASTM D-1751-60T
Non extruding & resilient non bituminous type (rubber) ASTM D-5249

NOTE
Joint sealant material shall meet ASTM and AASHTO designations as follows:
ASTM D-3405 .... AASHTO M-301 or
ASTM D-1190-74 .... AASHTO M-173-84
or latest revisions therof.

JOINT REQUIREMENTS FOR CONCRETE PAVEMENT

STREET	JOINT TYPE	JOINT AND BAR REQUIREMENTS	
All Arterial, Non-Residential	Transverse	TYPE G 1"Φ smooth dowel bars 18"lg. @ 12" ctrs.	
26'-51' wide pavement	Longitudinal	Within a poured section: TYPE F 5/8 "Φ deformed tie bars 18"lg. @ 30" ctrs.	At the edge between two poured sections: TYPE B 5/8 "Φ deformed tie bars 30"lg. @ 30" ctrs.
7"-8" thick concrete	Expansion	TYPE A or Type A Modified	

CITY OF O'FALLON
ENGINEERING DEPARTMENT
O'FALLON, MISSOURI

PAVEMENT CONSTRUCTION DETAILS
INTEGRAL VERTICAL CURB AND CONCRETE PAVEMENT TYPICAL SECTIONS AND DETAILS

INTEGRAL ROLLED CURB AND CONCRETE PAVEMENT TYPICAL SECTIONS AND DETAILS

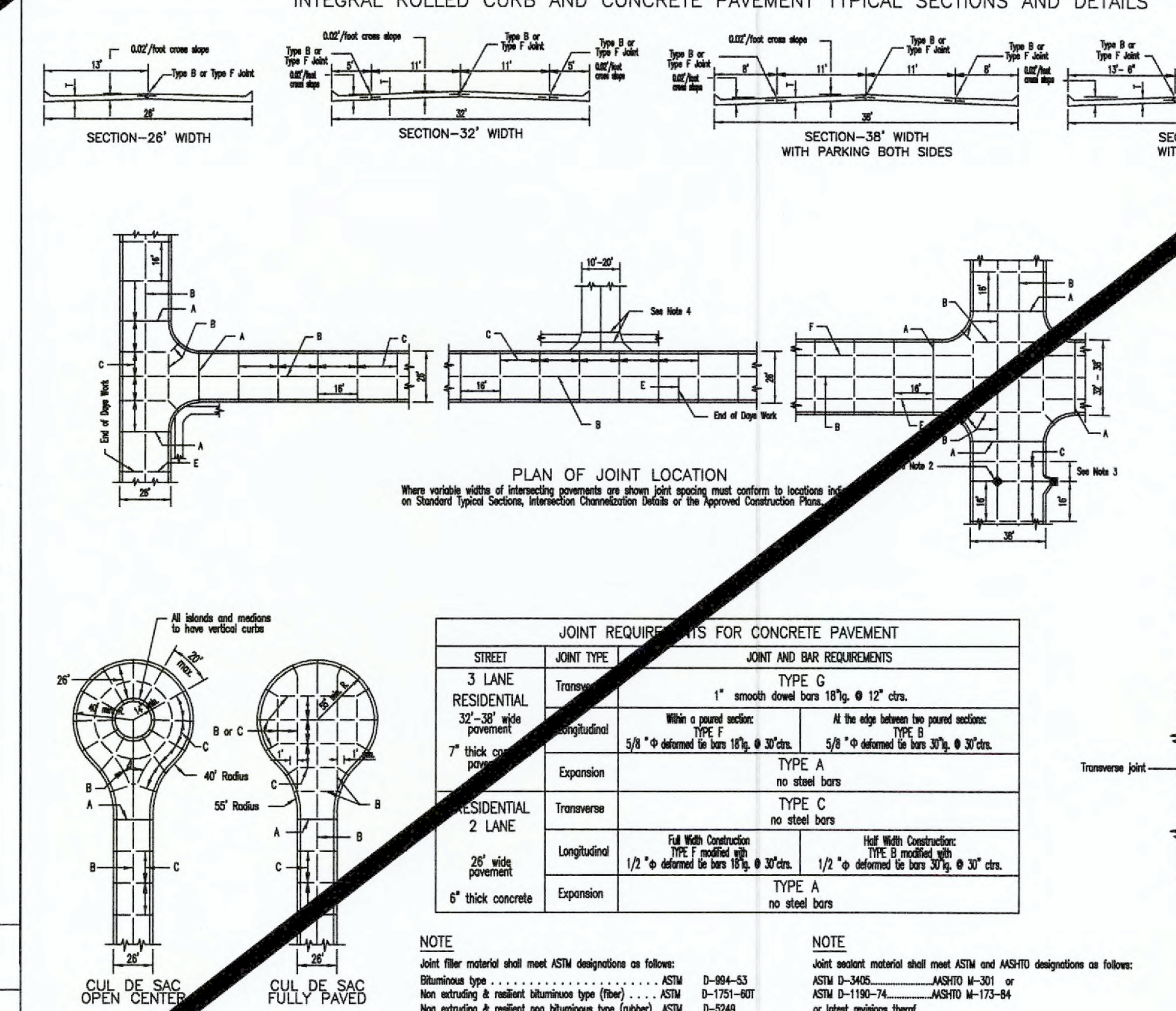

GENERAL NOTES

1. Do not scale drawing. Follow dimensions.
2. All street inlets shall be separated from the pavement and curb by expansion joint material extending completely through curb and slab. Manhole casting within the pavement limits shall be boxed as shown.
3. When a joint falls within 5ft. of, or contacts inlets, manholes, or other structures, shorten one or more panels either side of opening to permit joint to fall on round structures and at or between corners of rectangular structures.
4. Driveway configurations are shown in the "Entrance Construction Details."
5. Construction joints and tie bars may be omitted when curb is poured monolithic with pavement.
6. Minimum Thickness for Pavement is:
   - Residential Streets 26'-32' wide: 6"
   - Residential Streets 39' wide: 7"
7. For joint and bar requirements refer to the Pavement Construction Details for "Joints and Curbs." Note that the width and location may change the type of joint required.
8. Transverse or longitudinal construction joints in slip formed pavements shall be a saw cut joint. at a max. 14' spacing
9. The locations of the Type B longitudinal construction joints in the sections may be interchanged for the different widths of construction if approved by the Department.

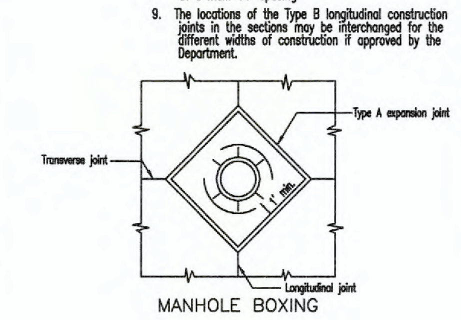

JOINT REQUIREMENTS FOR CONCRETE PAVEMENT

STREET	JOINT TYPE	JOINT AND BAR REQUIREMENTS	
3 LANE RESIDENTIAL 32'-38' wide pavement 7" thick concrete pavement	Transverse	TYPE G 1" smooth dowel bars 18"lg. @ 12" ctrs.	
	Longitudinal	Within a poured section: TYPE F 5/8 "Φ deformed tie bars 18"lg. @ 30"ctrs.	At the edge between two poured sections: TYPE B 5/8 "Φ deformed tie bars 30"lg. @ 30"ctrs.
	Expansion	TYPE A no steel bars	
RESIDENTIAL 2 LANE 26' wide pavement 6" thick concrete	Transverse	TYPE C no steel bars	
	Longitudinal	Full Width Construction: TYPE F modified with 1/2 "Φ deformed tie bars 18"lg. @ 30"ctrs.	Half Width Construction: TYPE B modified with 1/2 "Φ deformed tie bars 30"lg. @ 30" ctrs.
	Expansion	TYPE A no steel bars	

NOTE
Joint filler material shall meet ASTM designations as follows:
Bituminous type .... ASTM D-994-53
Non extruding & resilient bituminous type (fiber) .... ASTM D-1751-60T
Non extruding & resilient non bituminous type (rubber) ASTM D-5249

NOTE
Joint sealant material shall meet ASTM and AASHTO designations as follows:
ASTM D-3405 .... AASHTO M-301 or
ASTM D-1190-74 .... AASHTO M-173-84
or latest revisions therof.

CITY OF O'FALLON
ENGINEERING DEPARTMENT
O'FALLON, MISSOURI

PAVEMENT CONSTRUCTION DETAILS
INTEGRAL ROLLED CURB AND CONCRETE PAVEMENT TYPICAL SECTIONS AND DETAILS

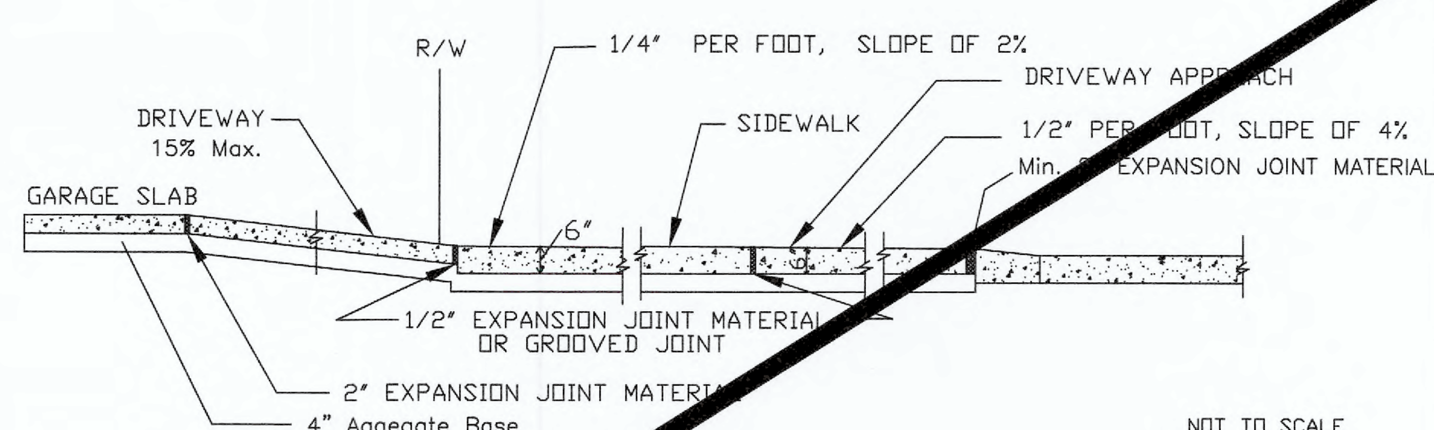

NOT TO SCALE

NOTES:

1: All driveway entrances shall be six (6) inches P.C.C. in depth from the curb to the property line.

2: All driveway approaches constructed in conjunction with sidewalk shall give the appearance that the sidewalk is continuous. That portion of the driveway approach that doubles as a sidewalk shall have a one-fourth (1/4) inch per foot cross slope the same as the abutting sidewalk.

3: A two (2) inch expansion joint is required between the street and driveway approach. One (1) additional two (2) inch expansion joint is required between the garage floor and the termination of the driveway.

CITY OF O'FALLON
ENGINEERING DEPARTMENT
O'FALLON, MISSOURI

Integral Curb Detail "B" at Driveway
SECTION NO. 505.080

TYPE A (MODIFIED) CONSTRUCTION JOINT

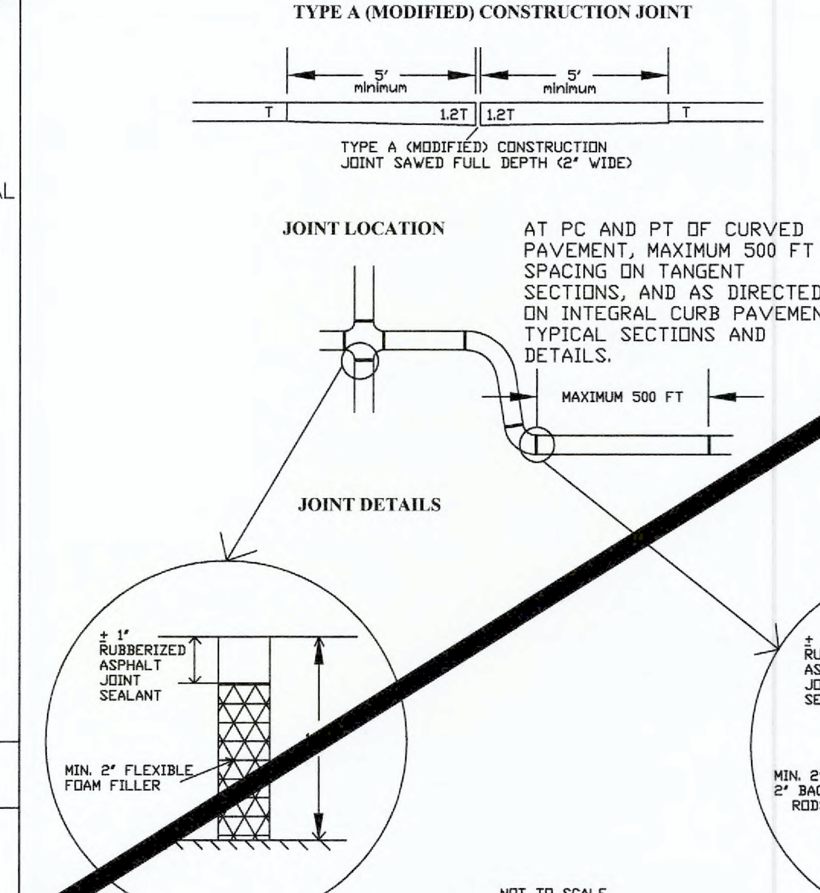

NOTES:

1. THE NUMBER OF BACKER RODS REQUIRED WILL VARY WITH THE PAVEMENT THICKNESS. BACKER RODS AND FLEXIBLE FOAM FILLER MUST EXTEND THROUGH THE FULL DEPTH OF THE PAVEMENT.
2. JOINT FILLER SHALL BE A FLEXIBLE, NONABSORBENT, NON-GASSING, NON-STAINING, NON-SHRINKING MATERIAL EXTRUDED FROM A CLOSED CELL POLYMER, ASTM D-5249.
3. JOINT FILLER COMPOSED OF CELLULAR FIBERS, ASTM D-1751, MAY BE USED AT DRIVEWAY, SIDEWALK, AND SEWER INLET AND MANHOLE LOCATIONS.
4. SEE "INTEGRAL CURB DETAIL "B" AT DRIVEWAYS" FOR EXPANSION JOINT REQUIREMENTS AT DRIVEWAY CONNECTIONS TO THE STREET AND THE GARAGE.

CITY OF O'FALLON
ENGINEERING DEPARTMENT
O'FALLON, MISSOURI

PAVEMENT CONSTRUCTION DETAIL

City of O'Fallon Standard Subdivision Notes and Details - June 2010

AS-BUILT WATERLINE PLAN

PROJECT TITLE:
EL TIO PEPE MEXICAN RESTAURANT
315 WEST TERRA LANE
O'FALLON, ST. CHARLES, MISSOURI 63366

Bax Project #97-9351A | Issue Date: 04/12/2017

ENGINEERING PLANNING SURVEYING
221 Point West Blvd.
St. Charles, MO 63301
636-928-5552
FAX 928-1718

DISCLAIMER OF RESPONSIBILITY
I hereby specify that the documents intended to be authenticated by my seal are limited to this sheet, and I hereby disclaim any responsibility for all other Drawings, Specifications, Estimates, Reports or other documents or instruments relating to or intended to be used for any part or parts of the architectural or engineering project or survey.

REFERENCE DRAWING

REVISIONS

09/19/17	CITY COMMENTS
10/04/17	CITY COMMENTS
08/08/19	AS-BUILT PLANS

Developer / Owner:
WR HOLMAN, LLC
2 HICKORY HILL DRIVE
O'FALLON, MISSOURI 63366
(636) 734-1815

PAVEMENT DETAILS

P+Z No. 33-14.01

CUP No. 33-14.01.01

LAST SAVE: 8/8/2019 BY: TMYERS LAST PLOT: 8/8/2019 BY: TONY MYERS
FILE LOCATION: \\VAULTSERVER\CIVIL 3D PROJECTS\9351A 315 WEST TERRA\SURVEY\ASBUILTS\97-9351A CONTRACTOR ONLY AB FIRE LINE AND SEWER 4-1-19.DWG

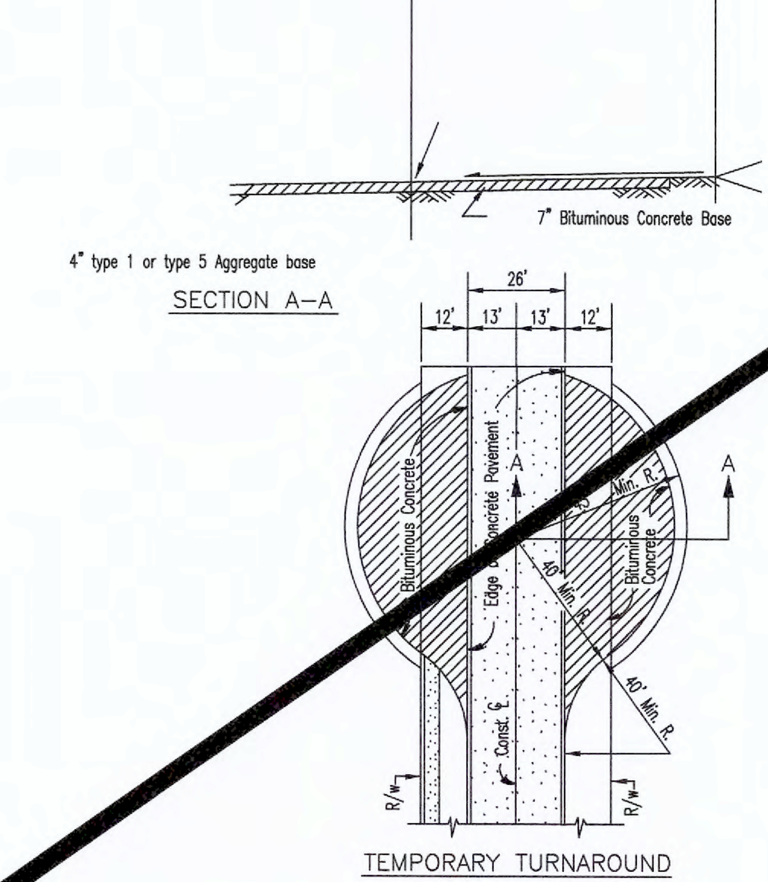

5. Permits will not be issued for building construction on lots abutting a temporary turnaround unless and until the turnaround is actually constructed.
6. The removal of the temporary turnaround surface, the restoration of the disturbed ground, and the extension of any sidewalk shall be the responsibility of the party(ies) that will be extending the street.
7. Other temporary turn around types can be considered depending on type and dimensions
8. Stub streets over two hundred fifty (250) feet shall have a minimum temporary turnaround pavement radius of forty (40) feet, covered by a temporary turnaround easement to remain until the road is extended and platted. In lieu of turnarounds, the Planning and Zoning Commission may approve a "T" or "Y" shaped paved space on streets which are less than two hundred fifty (250) feet in length and are planned to be extended in the future.

CITY OF O'FALLON
ENGINEERING DEPARTMENT
O'FALLON, MISSOURI

PAVEMENT CONSTRUCTION DETAILS
RESIDENTIAL
TEMPORARY TURNAROUND

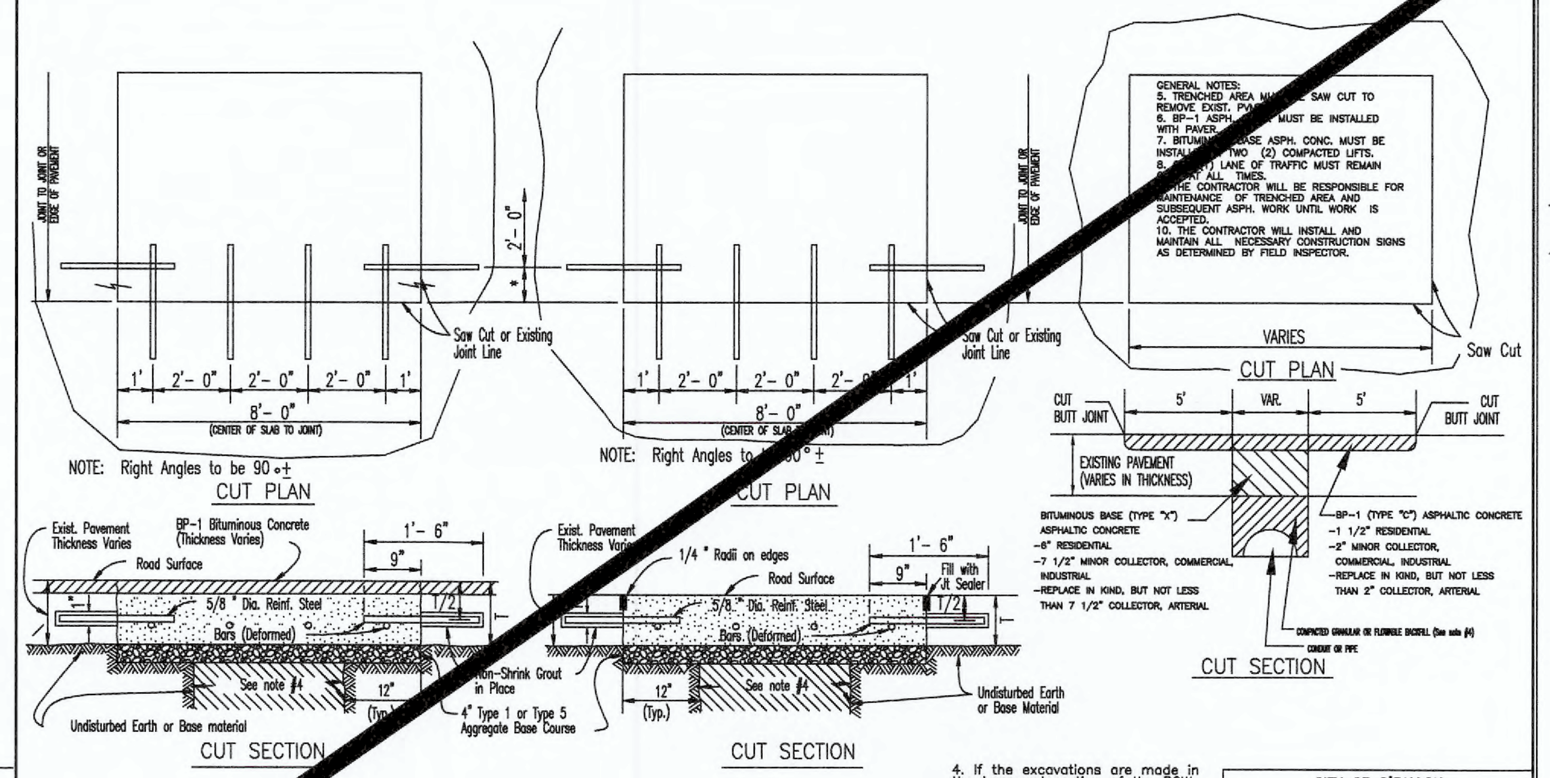

GENERAL NOTES

1. If a permit is issued to replace existing asphaltic concrete pavement with full depth bituminous concrete pavement and concrete pavement is found under the existing asphaltic concrete pavement, the applicant will be required to follow the Detail for Bituminous Concrete over Concrete Pavement Cut. The applicant will use Duracrete or equivalent to replace the existing concrete and use 4" Type 1 or Type 5 Aggregate over Granular Backfill or Pugmill as a subbase. Duracrete sets up in approximately 4 hours at which time the BP-1 Bituminous Concrete Overlay can be applied to the base course.

2. If Bituminous Concrete over Concrete Pavement or Concrete Pavement is broken before sawcutting the pavement full concrete slab replacement will be required.

3. Minimum Thickness for Pavement Replacement is:

	CONCRETE (T)	BITUMINOUS (T)
All Residential Minor and Local Streets	6"	7 1/2"
Residential Collector, All County and Non-Residential Streets	7"	9 1/2"
All Arterial Streets	8"	12"

Pavement replacement will require 4" Type 1 or Type 5 Aggregate Base Course, Granular Backfill and Base will be compacted by mechanical tamping methods in lifts no greater than 6 inches.

4. If the excavations are made in the improved portion of the ROW, twelve inches of granular backfill will be placed over exposed facilities and controlled low strength material (CLSM) aka flowable fill will fill the hole within eight inches of the finished surface for concrete pavement. There will be a plastic membrane placed between the rock base and the CLSM to prevent the material from bleeding into the rock base. The remaining eight inches will be restored by placing a twenty eight day minimum strength, four thousand psi concrete mix.

CITY OF O'FALLON
ENGINEERING DEPARTMENT
O'FALLON, MISSOURI

DETAILS OF TEMPORARY
OPENINGS IN
ROADWAY PAVEMENT

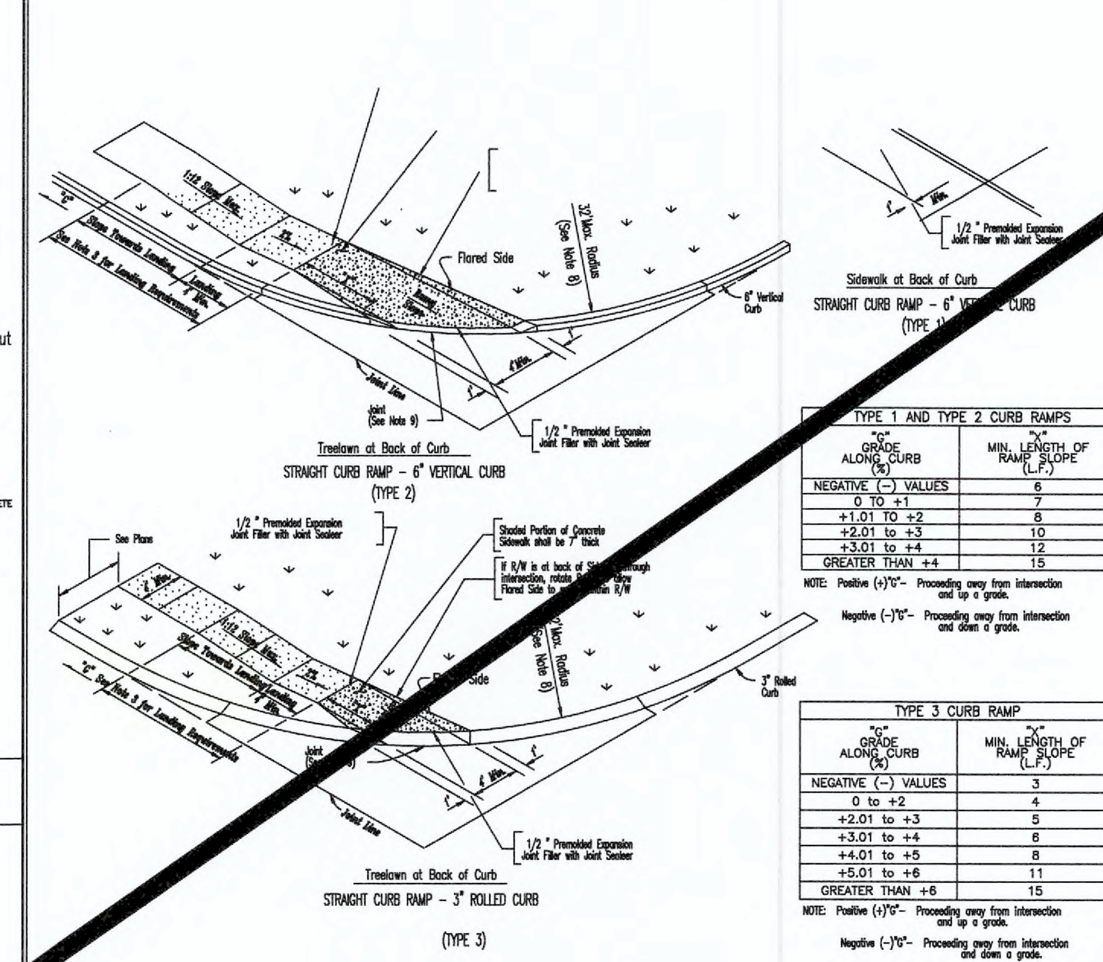

TYPE 1 AND TYPE 2 CURB RAMPS	
"G" GRADE ALONG CURB (%)	"X" MIN. LENGTH OF RAMP SLOPE (L.F.)
NEGATIVE (–) VALUES	6
0 TO +1	7
+1.01 TO +2	8
+2.01 to +3	10
+3.01 to +4	12
GREATER THAN +4	15

NOTE: Positive (+)"G"– Proceeding away from intersection and up a grade.
Negative (–)"G"– Proceeding away from intersection and down a grade.

TYPE 3 CURB RAMP	
"G" GRADE ALONG CURB (%)	"X" MIN. LENGTH OF RAMP SLOPE (L.F.)
NEGATIVE (–) VALUES	3
0 to +2	4
+2.01 to +3	5
+3.01 to +4	6
+4.01 to +5	8
+5.01 to +6	11
GREATER THAN +6	15

NOTE: Positive (+)"G"– Proceeding away from intersection and up a grade.
Negative (–)"G"– Proceeding away from intersection and down a grade.

1. Do not scale drawing. Follow dimensions.
2. Sidewalks and sidewalk curb ramps shall be constructed in accordance with these details and the current approved "Americans with Disabilities Act Access ibility Guidelines" (ADAAG)
3. Minimum sidewalk width along 6" vertical curb shall be 5 feet. Minimum sidewalk width along 3" rolled curb shall be 4 feet.
4. Maximum sidewalk cross slope 0.02'/ft..
5. All sidewalk sections shall be 4" thick, except where indicated as 7" thick by shaded portions shown on details. All sidewalk sections and curb ramps, regardless of thickness, shall be paid for as "Concrete Sidewalk".
6. Where curb ramp meets pavement, Bullnose will not be permitted.
7. If integral concrete curb is constructed, strike a dummy joint across bottom of ramp at curb line. If concrete curb is doweled-on, block out pavement to provide full depth curb across ramp from outer point of curb taper to outer point of curb taper.
8. For sidewalk locations on Cul-De-Sacs, refer to "Pavement Construction Details".
9. For roadway cross slopes, pavement types, and thicknesses, refer to "Standard Typical Sections".
10. The intersection of two sidewalks or the intersection of a sidewalk and a driveway may serve as a wheelchair passing space on sidewalks less than 5 feet wide.
11. All curb ramps shall have a detectable warning complying with "Americans with Disabilities Act Accessibility Guidelines" (ADAAG).

CITY OF O'FALLON
ENGINEERING DEPARTMENT
O'FALLON, MISSOURI

CONCRETE SIDEWALK
WITHIN CUL-DE-SACS

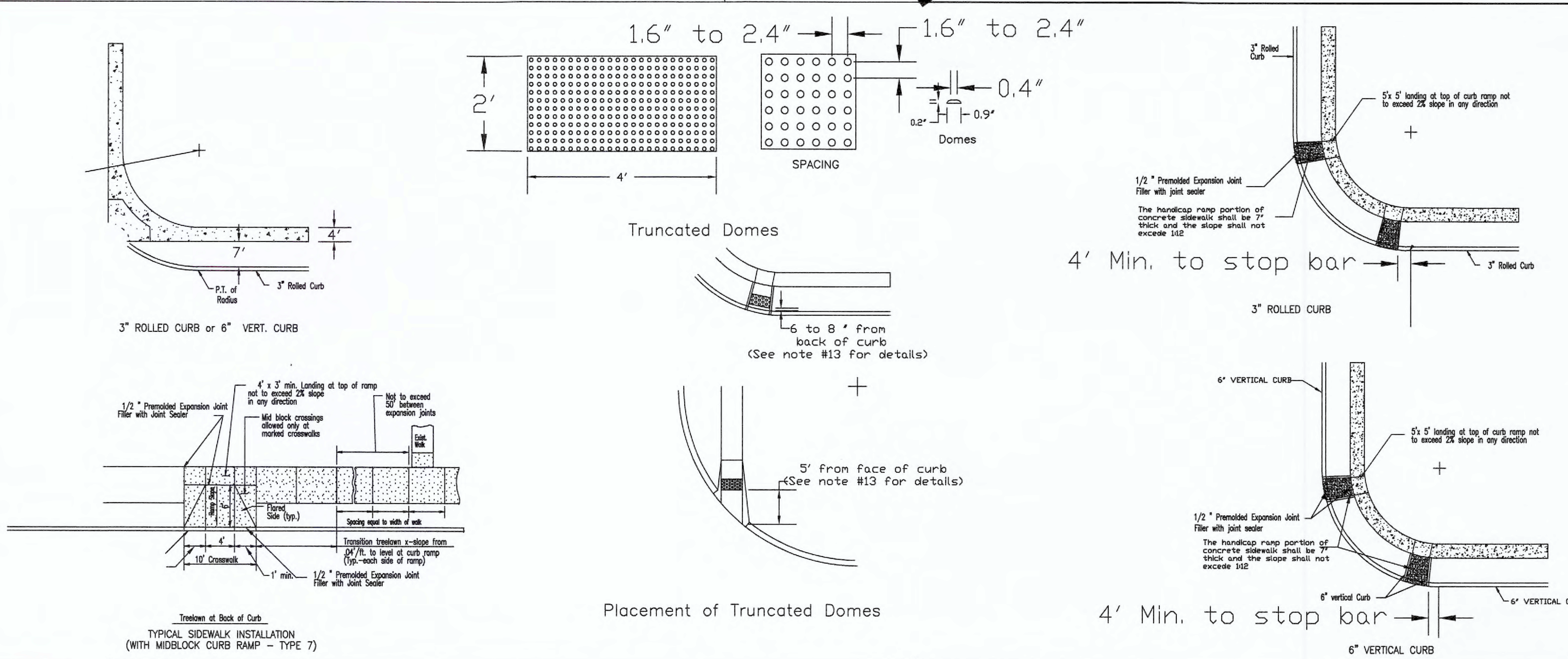

GENERAL NOTES

1. Do not scale drawing. Follow dimensions.
2. Sidewalks and sidewalk curb ramps shall be constructed in accordance with these details and the current approved "Americans with Disabilities Act Access ibility Guidelines" (ADAAG)
3. Minimum sidewalk width along 6" vertical curb shall be 5 feet. Minimum sidewalk width along 3" rolled curb shall be 4 feet.
4. Maximum sidewalk cross slope 0.02'/ft..
5. All sidewalk sections shall be 4" thick, except where indicated as 7" thick by shaded portions shown on details.
6. Where curb ramp meets pavement, Bullnose will not be permitted.
7. If integral concrete curb is constructed, strike a dummy joint across bottom of ramp at curb line. If concrete curb is doweled-on, block out pavement to provide full depth curb across ramp from outer point of curb taper to outer point of curb taper.
8. For pavement longitudinal and transverse joints and dowel and tie bar requirements and dimensions, refer to the Pavement Construction Details for "Joints and Curbs",
9. For roadway cross slopes, pavement types, and thicknesses, refer to "Standard Typical Sections".
10. The intersection of two sidewalks or the intersection of a sidewalk and a driveway may serve as a wheelchair passing space on sidewalks less than 5 feet wide.
11. All curb ramps shall have a detectable warning complying with "Americans with Disabilities Act Accessibility Guidelines" (ADAAG).
12. All ramps must line up with the coesponding ramp on the other side of the street or intersection.
13. All truncated domes shall run paralle to the road that it's crossing.
14. Truncated warning domes shall not be stamped and will be a ADA approved product.

CITY OF O'FALLON
ENGINEERING DEPARTMENT
O'FALLON, MISSOURI

PAVEMENT CONSTRUCTION DETAILS
CONCRETE SIDEWALK
AND CURB RAMPS

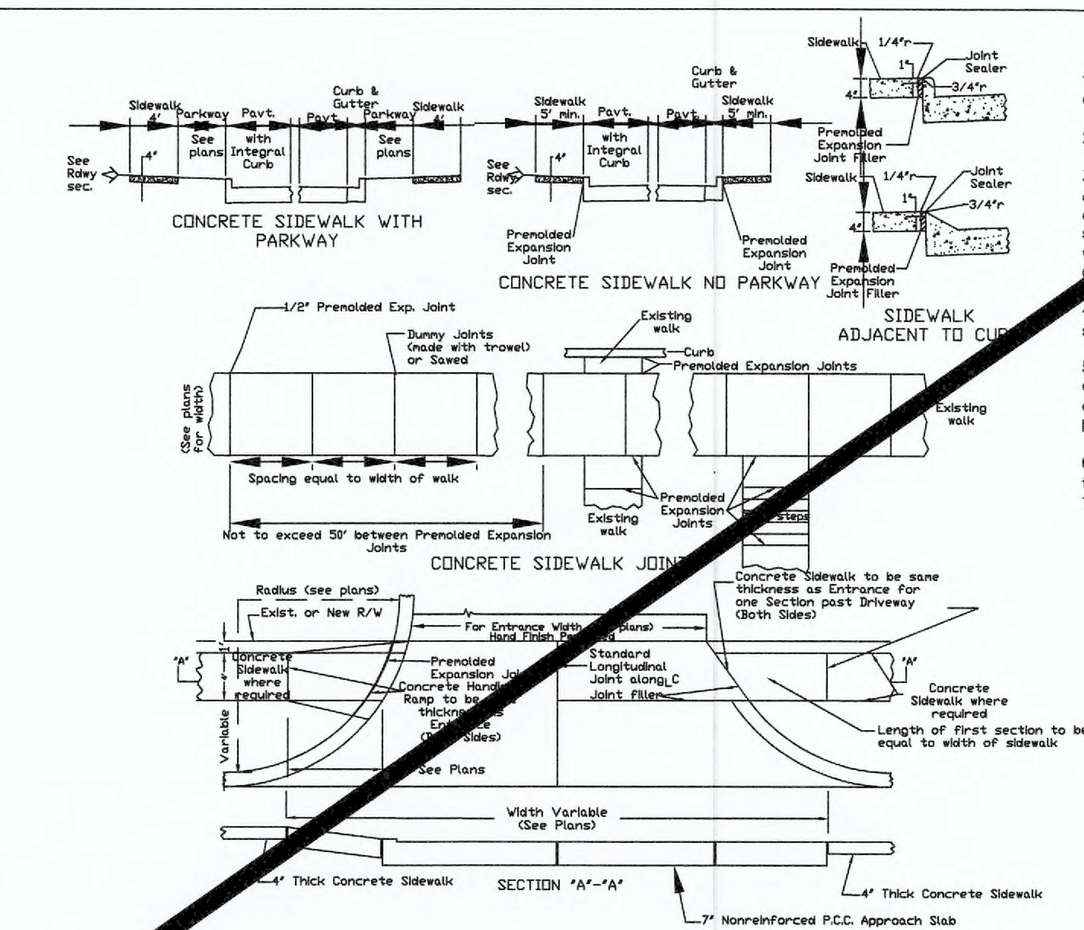

GENERAL NOTES

1. Do not scale drawing. Follow dimensions.
2. Sidewalk cross slope 0.02'/ft.
3. Sidewalk thickness increases to 6" on each side of Private Driveways and 7" on each side of Commercial Driveways for one section of sidewalk equal in length to the width of the sidewalk. See "Entrance Construction Details".
4. For sidewalk locations on Cul-De-Sacs see "Pavement Construction Details".
5. For longitudinal and transverse joints, dowel, and tie bar requirements and dimensions refer to the "Integral Curb Pavement Typical Sections and Details".
6. For roadway cross slopes, pavement types, and thickness, refer to "Standard Typical Section".

CITY OF O'FALLON
ENGINEERING DEPARTMENT
O'FALLON, MISSOURI

CONCRETE SIDEWALK
THROUGH
COMMERCAL ENTRANCES

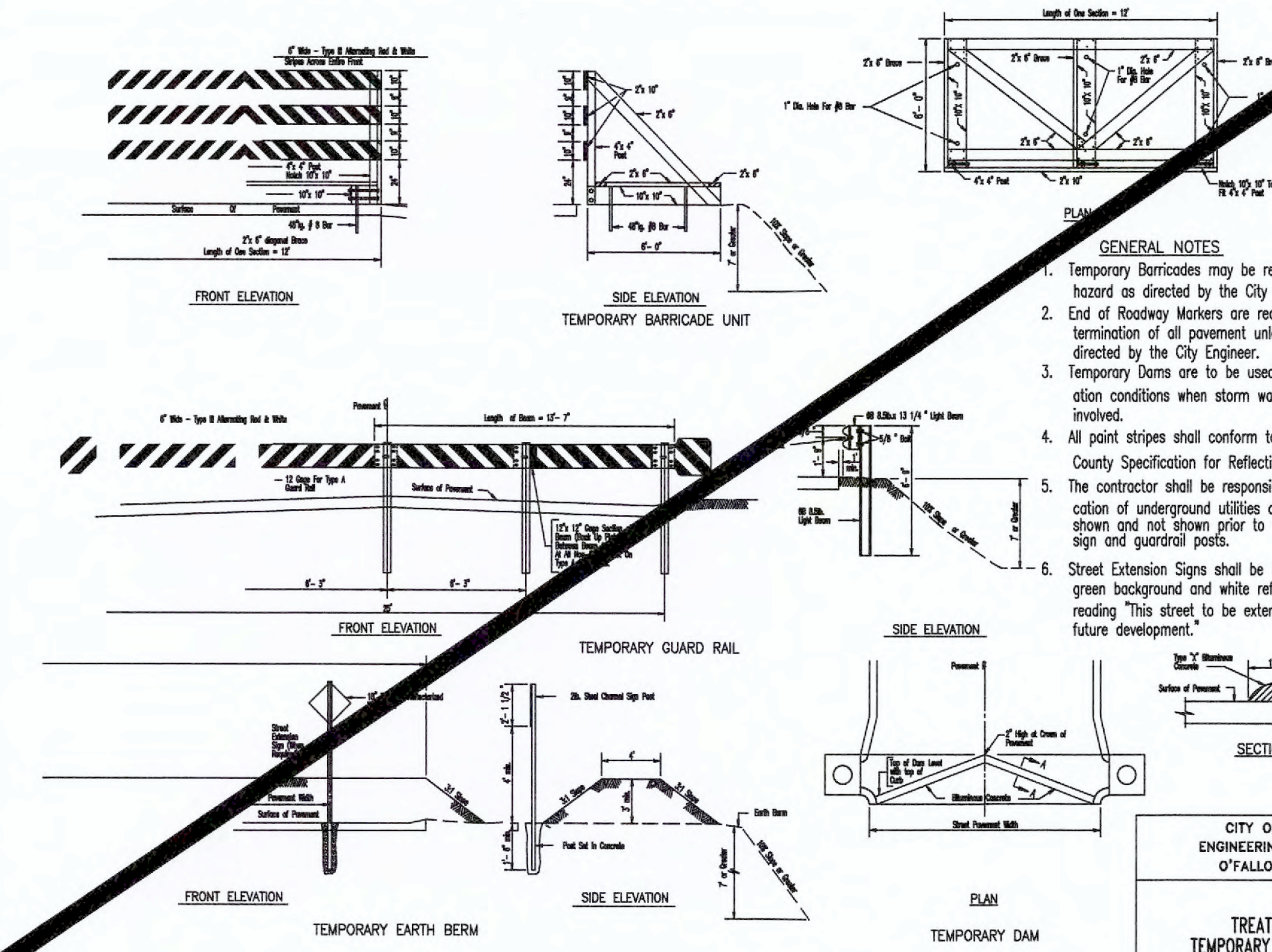

GENERAL NOTES
1. Temporary Barricades may be required at any hazard as directed by the City Engineer.
2. End of Roadway Markers are required at the termination of all pavement unless otherwise directed by the City Engineer.
3. Temporary Dams are to be used with all termination conditions when storm water inlets are involved.
4. All paint stripes shall conform to Saint Charles County Specification for Reflective Paint.
5. The contractor shall be responsible for verification of underground utilities and structures shown and not shown prior to the placement of sign and guardrail posts.
6. Street Extension Signs shall be 12"x 18" with green background and white reflective letters reading "This street to be extened as part of future development."

CITY OF O'FALLON
ENGINEERING DEPARTMENT
O'FALLON, MISSOURI

TREATMENT OF
TEMPORARY TERMINATIONS
OF ROADWAY PAVEMENT

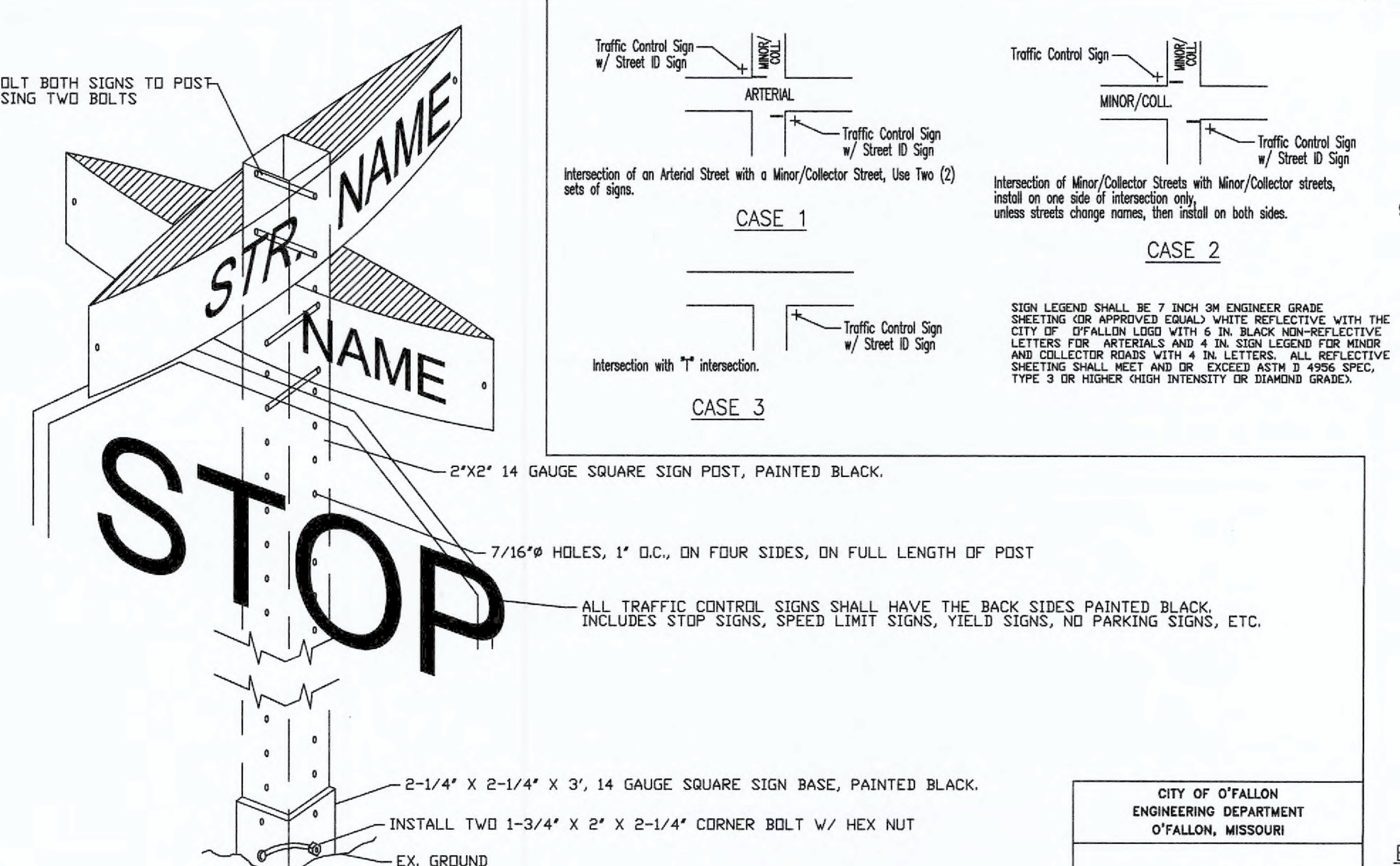

SIGN LEGEND SHALL BE 7 INCH 3M ENGINEER GRADE SHEETING (OR APPROVED EQUAL) WHITE REFLECTIVE WITH THE CITY OF O'FALLON LOGO WITH 6 IN. BLACK NON-REFLECTIVE LETTERS FOR ARTERIALS AND 4 IN. SIGN LEGEND FOR MINOR AND COLLECTOR ROADS WITH 4 IN. LETTERS. ALL REFLECTIVE SHEETING SHALL MEET AND OR EXCEED ASTM D 4956 SPEC, TYPE 3 OR HIGHER (HIGH INTENSITY OR DIAMOND GRADE).

CITY OF O'FALLON
ENGINEERING DEPARTMENT
O'FALLON, MISSOURI

ARTERIAL
SIGNS

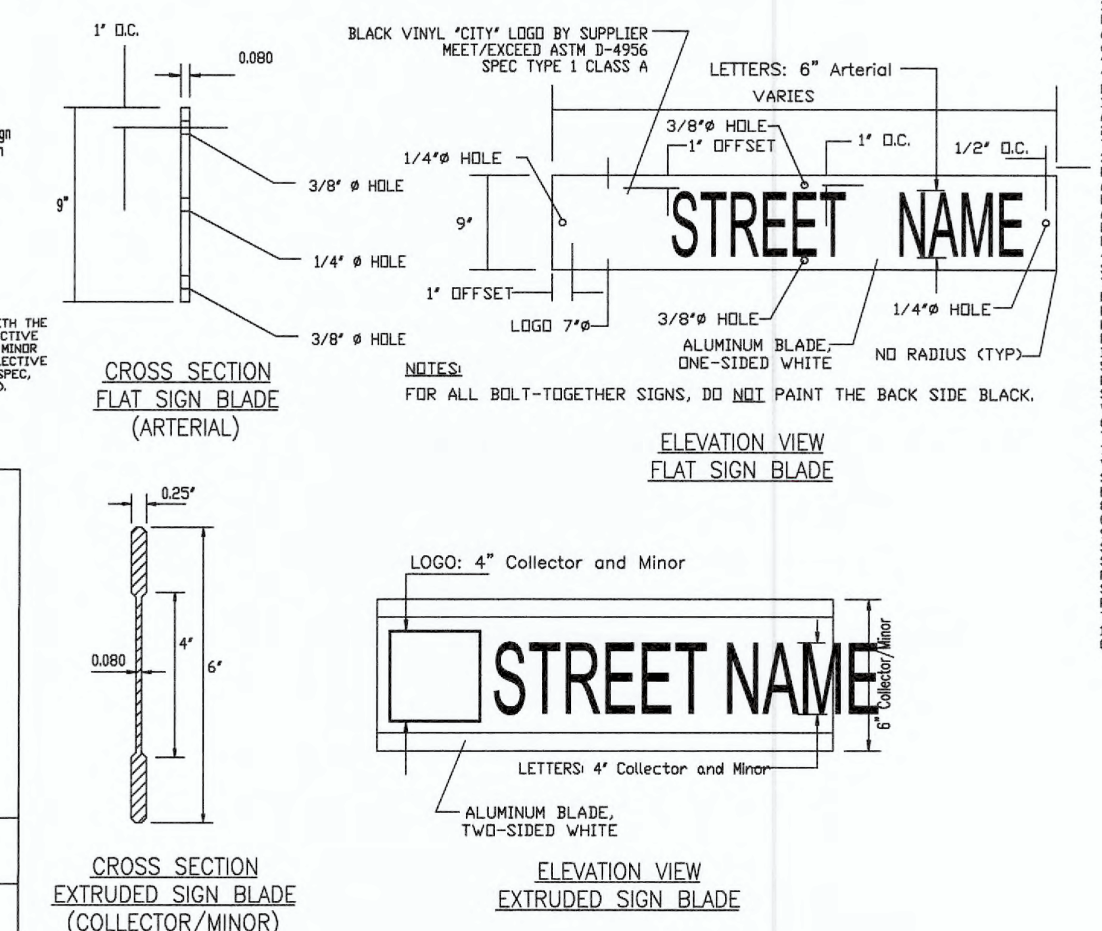

NOTES:
FOR ALL BOLT-TOGETHER SIGNS, DO NOT PAINT THE BACK SIDE BLACK.

ELEVATION VIEW
FLAT SIGN BLADE

GENERAL NOTES:
1. ALL SIGN POST AND BACK OF SIGNS THAT ARE TO BE PAINTED BLACK SHALL USE A PAINT SYSTEM THAT PROVIDES A MINIMUM 7 YEAR LIFE EXPECTANCY. MAY USE: a) "CARBOLINE RUSTBOND" BASE AT 1-2 MILS THICK, "CARBOLINE 893 SG" MID-LAYER AT 3-5 MILS THICK, "CARBOLINE 133 HB" TOP COAT OR APPROVED EQUAL, OR b) ELECTROSTATIC APPLIED, BLACK POWDER COATED AND BAKED ON PAINT SYSTEM AT 2-3 MILS THICKNESS OR APPROVED EQUAL.
2. ALL SIGN LOCATIONS AND SIZES MUST BE APPROVED BY THE ENGINEERING DIVISION PRIOR TO INSTALLATION.
3. STREET NAME SIGN PLATES SHALL BE 9 INCHES WIDE FLAT, BOLT TOGETHER FOR ANY ARTERIAL INTERSECTIONS AND 6 INCHES WIDE EXTRUDED ALUMINUM PANELS FOR ALL MINOR AND COLLECTOR ROADS. TYPICAL LENGTHS FOR MINOR AND COLLECTOR SIGNS SHALL BE 24, 30 & 36 INCH LENGTHS, OR LONGER AS NEEDED, TO ACCOMODATE STREET NAME.
4. SIGN LEGEND SHALL BE 7 INCH 3M ENGINEER GRADE SHEETING (OR APPROVED EQUAL) WHITE REFLECTIVE WITH THE CITY OF O'FALLON LOGO WITH 6 IN. BLACK NON-REFLECTIVE LETTERS FOR ARTERIALS AND 4 IN. SIGN LEGEND FOR MINOR AND COLLECTOR ROADS WITH 4 IN. LETTERS. ALL REFLECTIVE SHEETING SHALL MEET AND OR EXCEED ASTM D 4956 SPEC, TYPE 3 OR HIGHER (HIGH INTENSITY OR DIAMOND GRADE).
5. SIGN POSTS SHALL BE HEAVY "U" CHANNEL (2 LBS/FT) PAINTED BLACK STEEL POSTS FOR COLLECTOR/MINOR STREETS. ARTERIAL STREETS SHALL HAVE 2" SQUARE POSTS WITH BREAKAWAY ASSEMBLY.
6. SIGN POSTS SHALL EXTEND A MINIMUM of 30 INCHES IN THE GROUND AND PLUM
7. THE CONTRACTOR SHALL BE RESPONSIBLE FOR VERIFICATION OF UNDERGROUND UTILITIES AND STRUCTURES SHOWN OR NOT SHOWN. PLEASE CONTACT CITY FOR LOCATION OF CITY UTILITIES NOT FOUND BY DIG-RITE SERVICES.
8. SIGNS SHALL NOT CREATE A SITE DISTANCE PROBLEM OR CONFLICT WITH PEDESTRIAN TRAFFIC.
9. SPEED LIMIT SIGNS MUST BE AT EVERY ENTRANCE TO A SUBDIVISION ALONG THE LOT LINE BETWEEN FIRST AND SECOND LOT AND APPROXIMATELY EVERY TWO THOUSAND FEET THERE AFTER. ALSO, EVERY CONNECTING SIDE STREET MUST HAVE ONE SPEED LIMIT SIGN APPROXIMATELY FIFTY FEET FROM INTERSECTION AND APPROXIMATELY EVERY TWO THOUSAND FEET THERE AFTER.
10. ALL SIGNS UNLESS OTHERWISE STATED, SHOULD BE CONSTRUCTED AND INSTALLED PER MUTCD.

CITY OF O'FALLON
ENGINEERING DEPARTMENT
O'FALLON, MISSOURI

SIGNS,
DETAILS AND LOCATIONS

City of O'Fallon Standard Subdivision Notes and Details – June 2010

AS-BUILT WATERLINE PLAN

LAST SAVE:8/8/2019 BY:TMYERS LAST PLOT: 8/8/2019 BY:TONY MYERS
FILE LOCATION: \\VAULTSERVER\CIVIL 3D PROJECTS\9351A 315 WEST TERRA\SURVEY\ASBUILTS\97-9351A CONTRACTOR ONLY AB FIRE LINE AND SEWER 4-1-19.DWG

PROJECT TITLE:
EL TIO PEPE MEXICAN RESTAURANT
315 WEST TERRA LANE
O'FALLON, ST. CHARLES, MISSOURI 63366
Bax Project #97-9351A | Issue Date: 04/12/2017

ENGINEERING
PLANNING
SURVEYING
221 Point West Blvd.
St. Charles, MO 63301
636-928-5552
FAX 928-1718

DISCLAIMER OF RESPONSIBILITY
I hereby specify that the documents intended to be authenticated by my seal are limited to this sheet, and I hereby disclaim any responsibility for all other Drawings, Specifications, Estimates, Reports or other documents or instruments relating to or intended to be used for any part or parts of the architectural or engineering project or survey.

REFERENCE DRAWING

REVISIONS

09/19/17	CITY COMMENTS
10/04/17	CITY COMMENTS
08/08/19	AS-BUILT PLANS

Developer / Owner:
WR HOLMAN, LLC
2 HICKORY HILL DRIVE
O'FALLON, MISSOURI 63366
(636) 734-1815

ROADWAY, SIDEWALK AND SIGN DETAILS

P+Z No.
33-14.01

CUP No.
33-14.01.01

Heavy Duty 3-Bike Wave Bike Rack, 2 3/8" OD Model: 536-1001
Specifications Page 1

thepark AND FACILITIES CATALOG

Product Details:

Dimensions	Length 18.38" / Depth 2.375" / Height 36" (*46" In Ground*) / Mounting Plates 6"
Weight	Surface Mount: 32-lbs In-ground: 36-lbs
Styling	Contemporary
Capacity	Holds 3 Bikes
Finish	Durable baked-on powder coat, high-grade galvanized steel, or electrostatically oven cured SealGuard™
Construction	Heavy-Duty 2 3/8" O.D. Steel

Mounting Types:

Surface: Bolts through bottom plate into pre-drilled concrete into ground anchors. Use appropriate length and size bolt for local requirements.

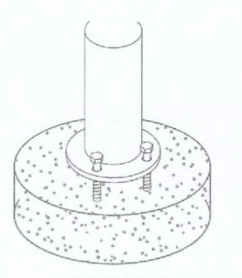

IG = In-Ground: Embedded in hole filled with concrete. Depth of the hole varies depending on local code.

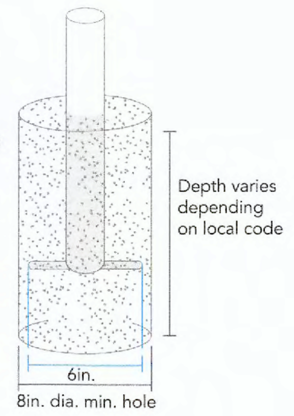

Heavy Duty 3-Bike Wave Bike Rack, 2 3/8" OD Model: 536-1001
Specifications Page 2

thepark AND FACILITIES CATALOG

In-ground Mount:

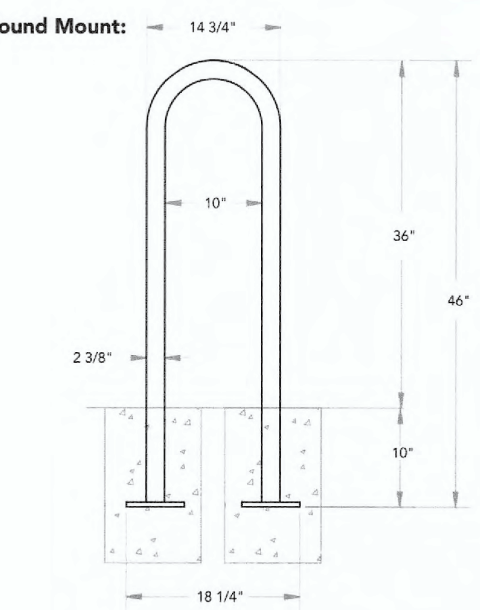

Surface Mount:

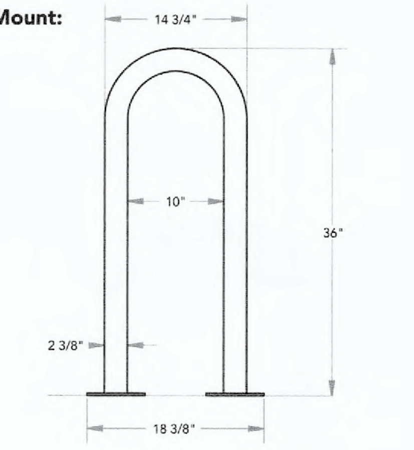

BIKE RACK DETAIL
USE OR SIMILAR

REFERENCE DRAWINGS ONLY
ENGINEERS SEAL DOES NOT APPLY
TO DETAILS ABOVE.

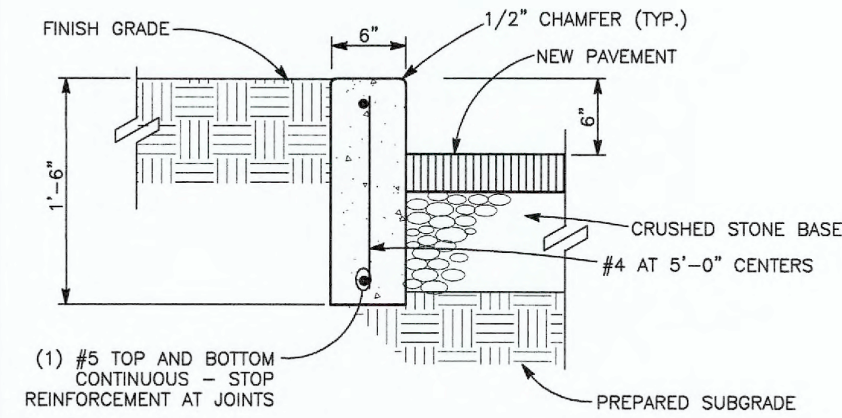

CONCRETE CURB DETAIL
NOT TO SCALE

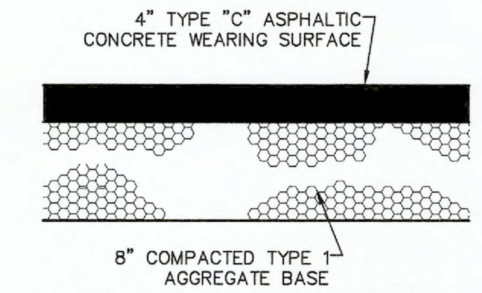

ASPHALT PAVEMENT DETAIL
DRIVE ISLES ONLY
NOT TO SCALE

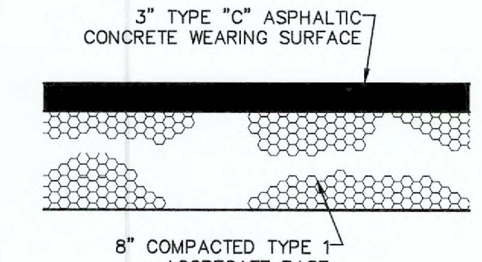

ASPHALT PAVEMENT DETAIL
NOT TO SCALE

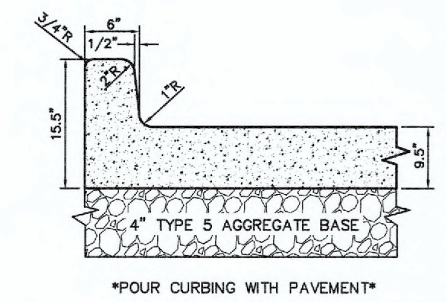

POUR CURBING WITH PAVEMENT

INTEGRAL VERTICAL CURB
NOT TO SCALE

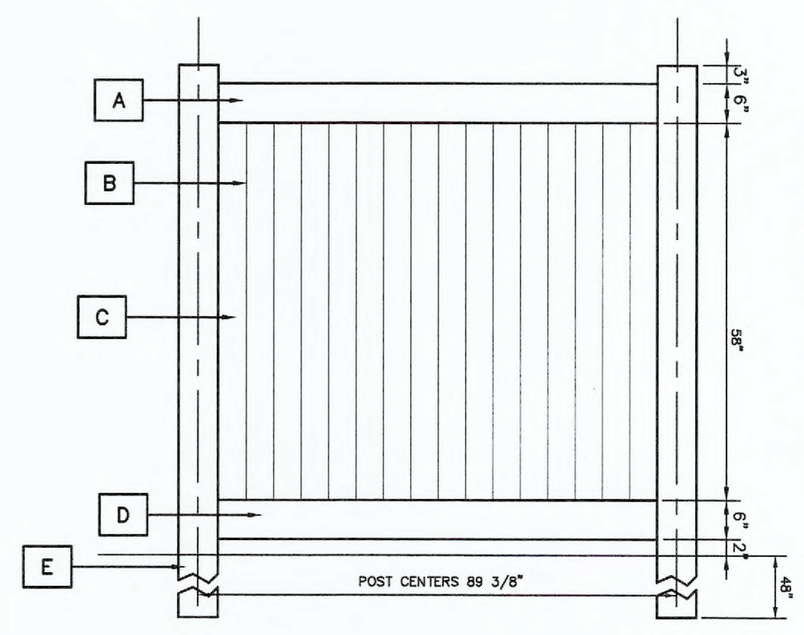

A	TOP RAIL 2"X 6'X 88" RIBBED CHANNELED TO ACCEPT PICKETS INCLUDES REINFORCING CHANNEL
B	PICKET SPACING NONE
C	PICKETS 28 PIECES OF 7/8"X 6"X 59-1/2"
D	BOTTOM RAIL 2"X 6'X 88" RIBBED CHANNELED TO ACCEPT PICKETS INCLUDES REINFORCING CHANNEL
E	POST 5"X 6' X 120" FOR IN GROUND INSTALLATION 5"X 6' X 84" FOR ABOVE GROUND INSTALLATION

6' HIGH VINYL PRIVACY FENCE
NOT TO SCALE

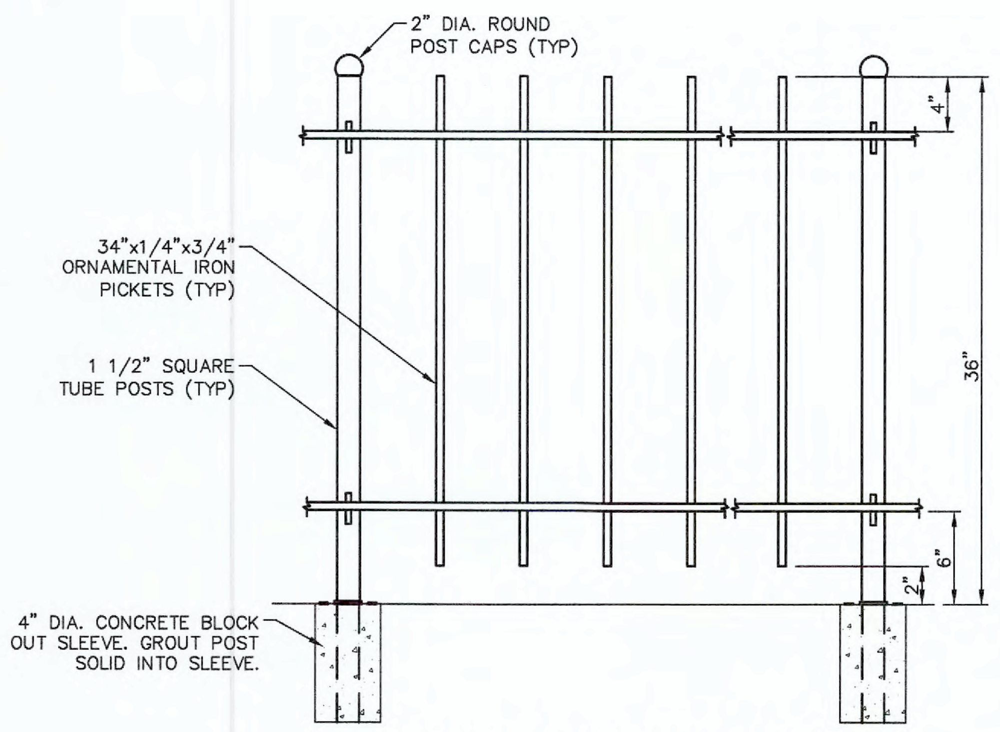

WROUGHT IRON FENCE - PATIO AREA
NOT TO SCALE

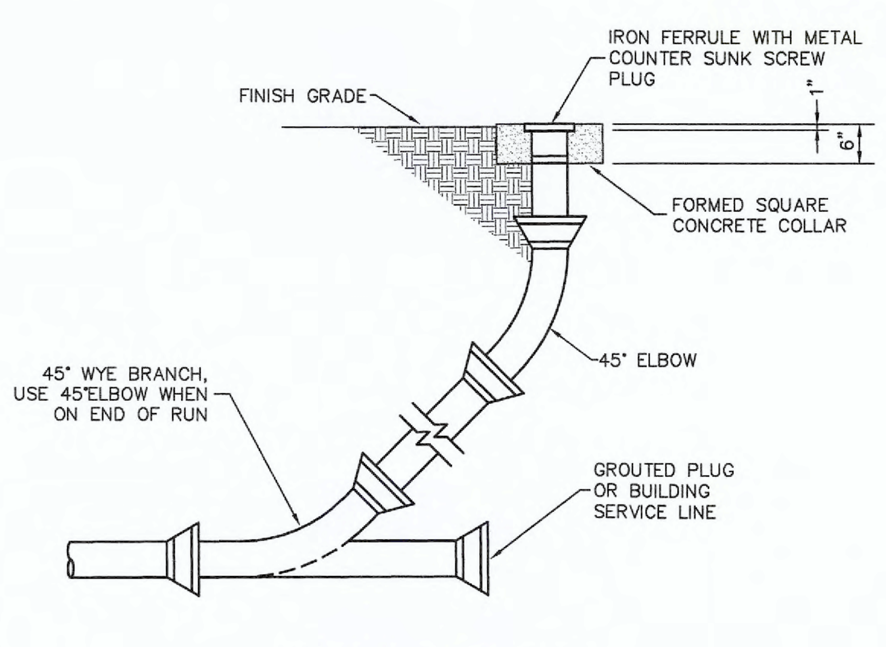

SEWER CLEANOUT
NOT TO SCALE

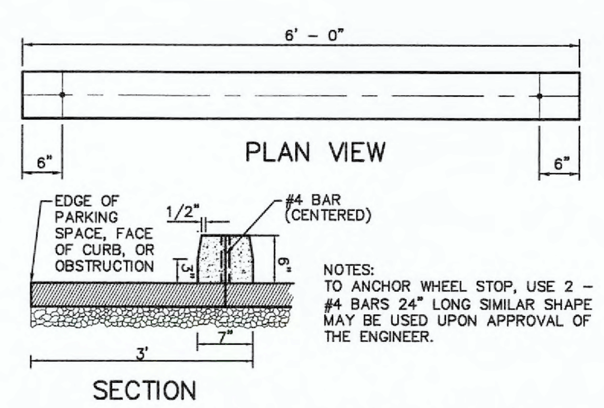

NOTES:
TO ANCHOR WHEEL STOP, USE 2 - #4 BARS 24" LONG SIMILAR SHAPE MAY BE USED UPON APPROVAL OF THE ENGINEER.

PRECAST CONCRETE WHEELSTOP

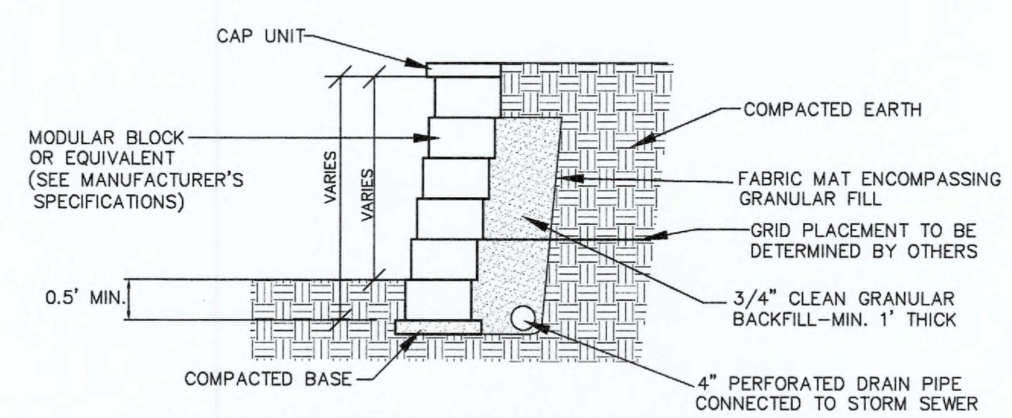

SEE MANUFACTURER'S SPECIFICATIONS FOR INSTALLATION PROCEDURE, AND GRID PLACEMENT

MODULAR BLOCK CONCRETE RETAINING WALL
(RETAINING WALL DESIGN BY OTHERS) NOT TO SCALE

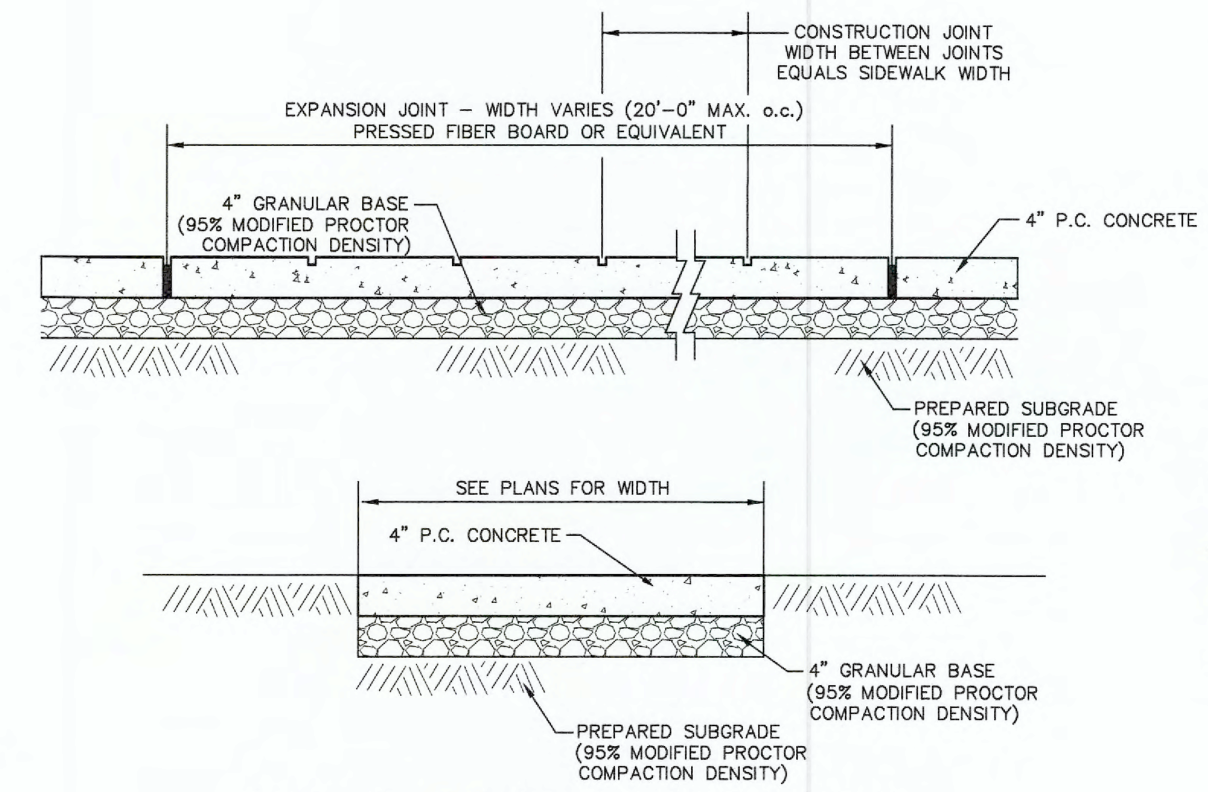

CONCRETE SIDEWALK WITH BASE DETAIL
NOT TO SCALE

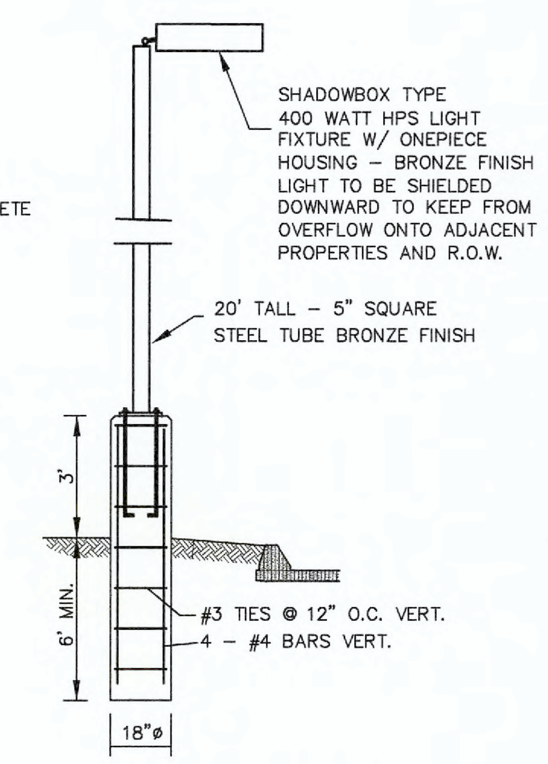

LIGHT POLE & BASE
NOT TO SCALE

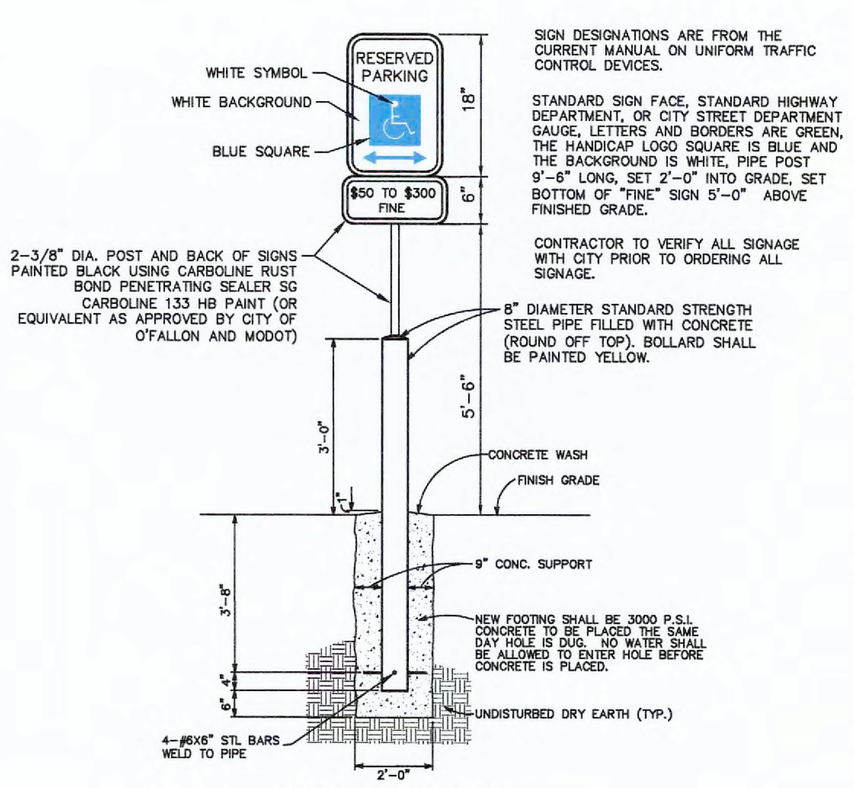

SIGN DESIGNATIONS ARE FROM THE CURRENT MANUAL ON UNIFORM TRAFFIC CONTROL DEVICES.

STANDARD SIGN FACE, STANDARD HIGHWAY DEPARTMENT, OR CITY STREET DEPARTMENT GAUGE, LETTERS AND BORDERS ARE GREEN, THE HANDICAP LOGO SQUARE IS BLUE AND THE BACKGROUND IS WHITE, PIPE POST 9'-6" LONG, SET 2'-0" INTO GRADE, SET BOTTOM OF "FINE" SIGN 5'-0" ABOVE FINISHED GRADE.

CONTRACTOR TO VERIFY ALL SIGNAGE WITH CITY PRIOR TO ORDERING ALL SIGNAGE.

SIGN TO BE CENTERED ON THE SPACE

PIPE BOLLARD
ACCESSIBLE PARKING SIGN
NOT TO SCALE

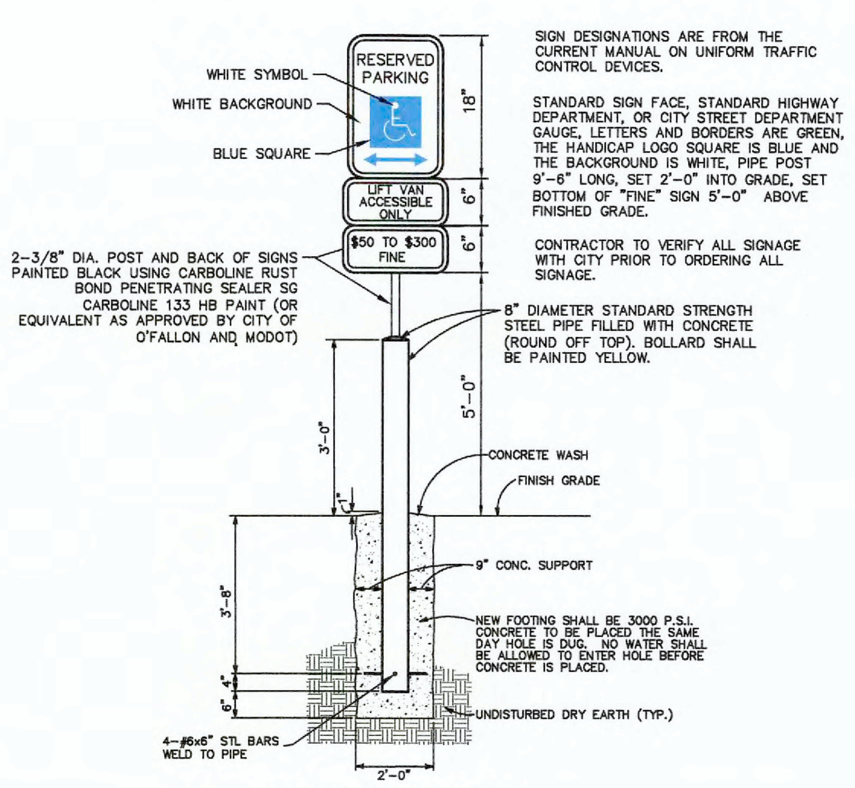

SIGN DESIGNATIONS ARE FROM THE CURRENT MANUAL ON UNIFORM TRAFFIC CONTROL DEVICES.

STANDARD SIGN FACE, STANDARD HIGHWAY DEPARTMENT, OR CITY STREET DEPARTMENT GAUGE, LETTERS AND BORDERS ARE GREEN, THE HANDICAP LOGO SQUARE IS BLUE AND THE BACKGROUND IS WHITE, PIPE POST 9'-6" LONG, SET 2'-0" INTO GRADE, SET BOTTOM OF "FINE" SIGN 5'-0" ABOVE FINISHED GRADE.

CONTRACTOR TO VERIFY ALL SIGNAGE WITH CITY PRIOR TO ORDERING ALL SIGNAGE.

SIGN TO BE CENTERED ON THE SPACE

PIPE BOLLARD
ACCESSIBLE VAN PARKING SIGN
NOT TO SCALE

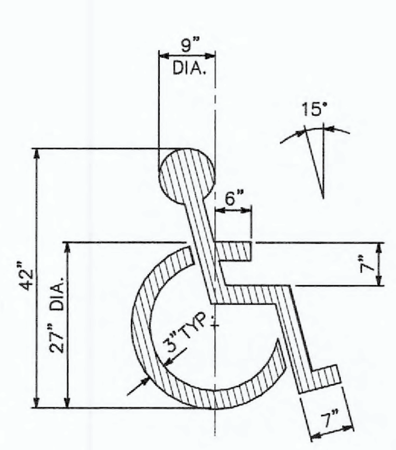

PAINTED HANDICAPPED
PARKING SYMBOL
NOT TO SCALE

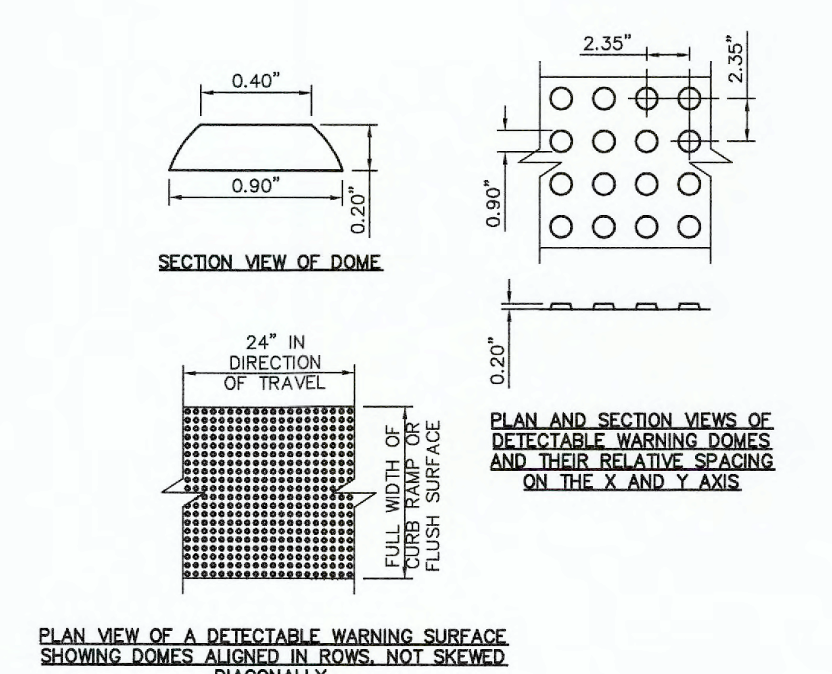

TYPICAL DETAIL OF DETECTABLE WARNING SURFACE
NOT TO SCALE

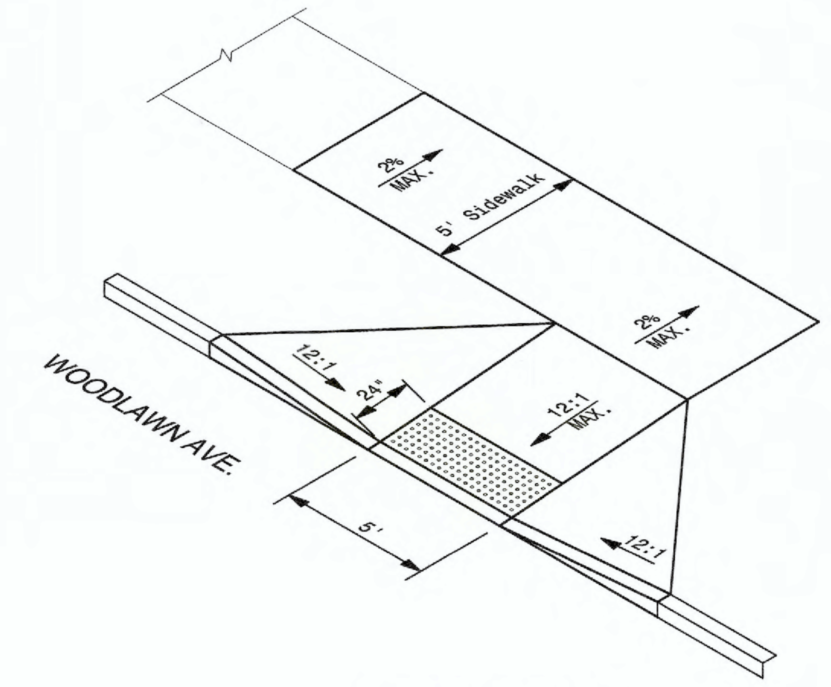

ACCESSIBLE RAMP
NOT TO SCALE

AS-BUILT WATERLINE PLAN

PROJECT TITLE:
EL TIO PEPE MEXICAN RESTAURANT
315 WEST TERRA LANE
O'FALLON, ST. CHARLES, MISSOURI 63366

Bax Project #97-9351A | Issue Date: 04/12/2017

ENGINEERING
PLANNING
SURVEYING
221 Point West Blvd.
St. Charles, MO 63301
636-928-5552
FAX 928-1718

DISCLAIMER OF RESPONSIBILITY
I hereby specify that the documents intended to be authenticated by my seal are limited to this sheet, and I hereby disclaim any responsibility for all other Drawings, Specifications, Estimates, Reports or other documents or instruments relating to or intended to be used for any part or parts of the architectural or engineering project or survey.

STATE OF MISSOURI
CLIFFORD L. HEITMANN
NUMBER E-29817
REGISTERED PROFESSIONAL ENGINEER
8-8-19

CLIFFORD L. HEITMANN
CIVIL ENGINEER
E29817

Copyright 2017
Bax Engineering Company, Inc.
Engineering Authority No. 000655
Surveying Authority No. 000144
All Rights Reserved

REVISIONS

09/19/17	CITY COMMENTS
10/04/17	CITY COMMENTS
08/08/19	AS-BUILT PLANS

Developer / Owner:
WR HOLMAN, LLC
2 HICKORY HILL DRIVE
O'FALLON, MISSOURI 63366
(636) 734-1815

CONSTRUCTION DETAILS

P+Z No.
33-14.01

CUP No.
33-14.01.01

Page No.

LAST SAVE:8/8/2019 BY:TMYERS LAST PLOT: 8/8/2019 BY:TONY MYERS
FILE LOCATION: \\VAULTSERVER\CIVIL 3D PROJECTS\9351A 315 WEST TERRA\SURVEY\ASBUILTS\97-9351A CONTRACTOR ONLY AB FIRE LINE AND SEWER 4-1-19.DWG

REFERENCE DRAWINGS ONLY
ENGINEERS SEAL DOES NOT APPLY
TO DETAILS BELOW.

www.invarion.com

616.8.33 (TA-33) Lane Closure on Left or Right Lane on Divided Highway- MT

SPEED	SIGN SPACING (ft.)		TAPER LENGTH (ft.)		OPTIONAL	CHANNELIZER SPACING (ft.)	
Permanent Posted (mph)	Undivided (S)	Divided (S)	Shoulder (1) (T1)	Lane (2) (T2)	BUFFER LENGTH (ft.) (B)	Tapers	Buffer/ Work Areas
0-35	-	200	70	245	280	35	40
40-45	-	500	150	540	400	40	80
50-55	-	1000	185	660	560	50	80
60-70	-	SA - 1000 SB - 1500 SC - 2640	235	840	840	60	120

1 Shoulder taper length based on 10 ft. (standard shoulder width) offset. 2. Lane taper length based on 12 ft. (standard lane width) offset.

	SIGN HEIGHT	MAXIMUM WORK ZONE LENGTH (L)
URBAN	1' Portable 7' Post	1 Mi.
RURAL UNDIVIDED	1' Portable 7' Post	2 Mi.

- Channelizer
- Sign
- Truck or Trailer Mounted Arrow Panel
- Protective Vehicle
- Truck Mounted Attenuator (TMA)
- Work Space
- (Advanced Warning Rail System) For Long Term Operations

A protective vehicle shall be used while work is in progress. The protective vehicle shall be equipped with a TMA and flashing arrow panel and positioned at least 150 ft. in advance of the work space. The protective vehicle may be eliminated if the roadway is posted at 45 mph or below, the work vehicle is positioned in advance of the work space, and the work vehicle is equipped with a flashing arrow panel and uses activated rotating lights or strobe lights.

All vehicles, equipment, workers and their activities should be restricted to one side of the pavement.

The open lane shall be provided with a 10 ft. minimum driving surface at all times. This may include a portion of the shoulder, provided the shoulder is of adequate strength to handle traffic.

For short duration operations, signs and channelizers may be reduced or eliminated.

For mobile operations where workers are on foot and move with the operation, channelizers may be reduced or eliminated.

For operations in which channelizers are not used, the arrow mode shall be displayed on any flashing arrow panel located downstream of the taper.

Supplemental warning methods may be used to call attention to the work zone.

Additional warning signs shall be erected at each intersection with another state highway within the work zone. Upon the discretion of the supervisor, additional warning signs may be erected at other intersections within the work zone.

For nighttime operations, review EPG 616.6.83 WARNING LIGHTS for use of sequential lights.

If rumble strips are used, review EPG 616.6.87 RUMBLE STRIPS.

For long-term operations, EPG 616.6.2.2 Flags and Advance Warning Rail System.

SEE EPG 616.12 WORK ZONE SPEED LIMITS FOR SPEED LIMIT GUIDELINES.

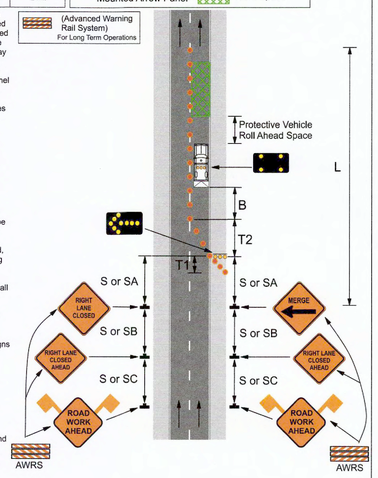

TA-33

1/16

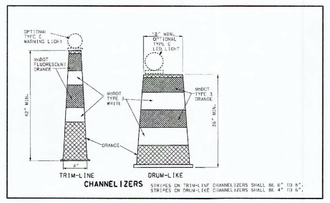

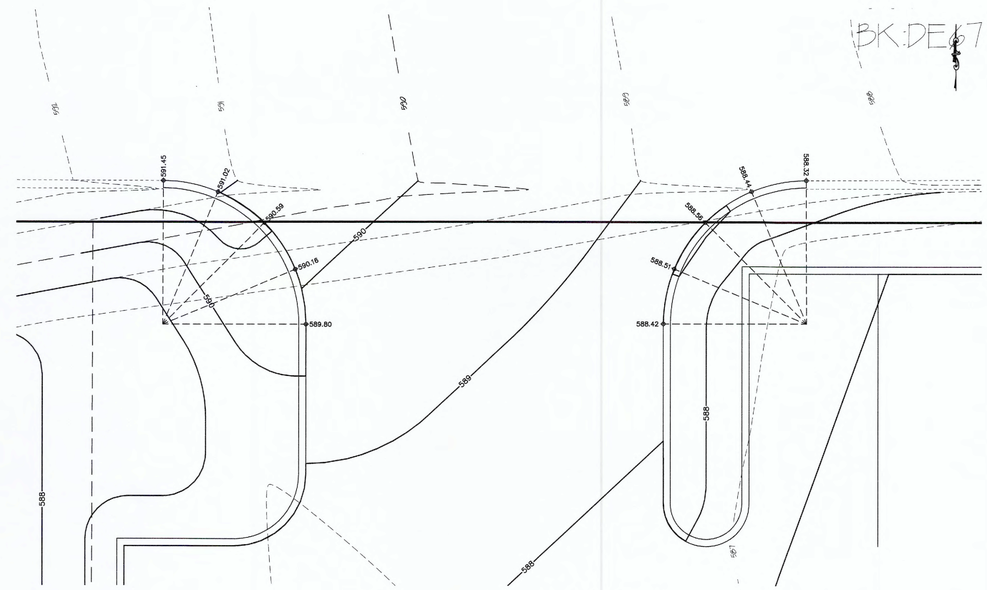

ENTRANCE AT CROSS ACCESS POINT

SCALE: 1"=5'

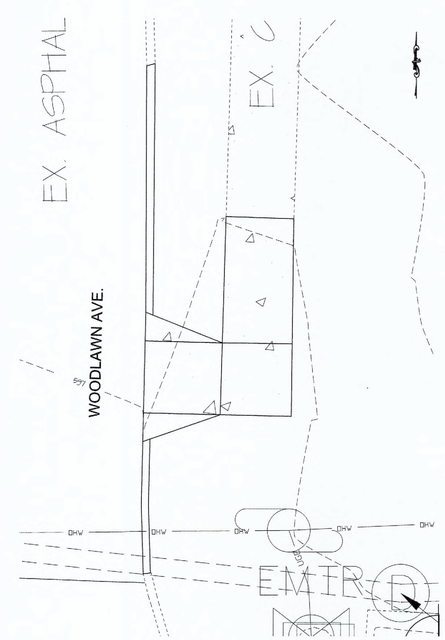

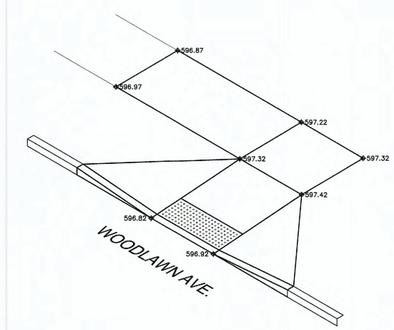

ACCESSIBLE RAMP @ SOUTHEAST CORNER OF WOODLAWN AVENUE AND WEST TERRA LANE

SCALE: 1"=5'

AS-BUILT WATERLINE PLAN

PROJECT TITLE:
EL TIO PEPE MEXICAN RESTAURANT

315 WEST TERRA LANE
O'FALLON, ST. CHARLES,
MISSOURI 63366

Box Project # 97-935/A | Issue Date: 04/12/2017

ENGINEERING
PLANNING
SURVEYING

221 Point West Blvd.
St. Charles, MO 63301
636-928-5552
FAX 928-1718

DISCLAIMER OF RESPONSIBILITY
I hereby specify that the documents intended to be authenticated by my seal are limited to this sheet, and I hereby disclaim any responsibility for all other Drawings, Specifications, Estimates, Reports or other documents or instruments relating to or intended to be used for any part or parts of the architectural or engineering profession.

STATE OF MISSOURI
CLIFFORD L. HEITMANN
NUMBER E-29817
REGISTERED PROFESSIONAL ENGINEER

CLIFFORD L. HEITMANN
CIVIL ENGINEER
E29817

Copyright 2017
Box Engineering Company, Inc.
Engineering Authority No. 000655
Surveying Authority No. 000144
All Rights Reserved

REVISIONS

09/19/17	CITY COMMENTS
10/04/17	CITY COMMENTS
08/08/19	AS-BUILT PLANS

Developer / Owner:
WR HOLMAN, LLC
2 HICKORY HILL DRIVE
O'FALLON, MISSOURI 63366
(636) 734-1815

ENTRANCE DETAILS

P+Z No.
33-14.01

CUP No.
33-14.01.01

Page No.
15 of 18

LAST SAVED 8/8/2019 BY:TWOYERS
FILE LOCATION:\\VAULSERVER\CIVIL 3D PROJECTS\935A-315 W.TERRA\SURVY\935B15TS\97-935\A CONTRACTOR ONLY AB FIRE LINE AND SEWER 4-1-19.DWG

STORM WATER POLLUTION PREVENTION PLAN

A. PURPOSE:

The purpose of the Storm Water Pollution Prevention Plan (SWPPP) is to inform the Developer/Contractor of the following objectives they are required to meet:

- Prevent erosion where construction activities shall occur.
- Prevent pollutants from mixing with storm water.
- Prevent pollutants from being discharged by trapping them on-site, before they can affect the receiving waters.
- All regulations of Missouri Department of Natural Resources are met.
- All regulations of the Environmental Protection Agency are met.
- All regulations of the local municipality are met.

B. PROJECT DESCRIPTION:

The project is located in the Lower Dardenne Creek Watershed Boundary (071100090105) in O'Fallon, Missouri. The project disturbs approximately 0.22 acres.

The project activities consist of the construction of ONE new building addition and associated parking lot. The site will be protected by the various erosion protection measures listed below:

1. Siltation Control: The entire perimeter of the project that allows storm water to exit will have silt siltation control installed. Details of these devices are depicted on the detail plans prepared by Box Engineering Company, Inc.
2. Revegetation: The site will consist of varying ground slopes, upon completion of the grading activities the slope prone to erosion will be seeded and strawed to stabilize the slope and prevent erosion.
3. Bioretention area: The site will have a bioretention area to treat stormwater runoff from the parking lot.

C. MAINTENANCE AND INSPECTION:

Regular Maintenance: Weekly inspections of the project will include: (a) The repair of any sediment (silt) fence and/or staked straw bale barriers damaged or out of place; (b) The removal of any accumulated trash and/or debris; and (c) The remove of any externally deposited waste materials.

Periodic inspections: Following each rain of more than 0.50 inch in 24 hours, the site will be inspected, and any necessary maintenance will be provided for a period of one year following the completion of the above remediation measures. Summaries of the maintenance and the inspections will be maintained and shall be kept available from the owner. An inspection report shall be filed and kept on site for every inspection. The report shall detail the findings of the inspection and if any action was required. The inspection form needs to include, name of the site, name of the inspector, permit number, date of inspection, major observations and actions taken to correct problems and the signature of the inspector. The inspection reports need to be kept on file by the permittee for three years after the project is completed.

The field inspections will be conducted in a systematic manner to minimize the possibility of any significant feature being overlooked. A detailed checklist will be developed and followed for the examination. Particular attention will be given to detecting evidence of erosion, slope instability, undue settlement, displacement, and tilting. Photographs and drawings will be used freely to record conditions in order to minimize descriptions. The field inspection will include appropriate features and items, including potential hazards to human life or property.

The condition of the slopes and vegetative cover will be evaluated and examined for erosion.

Measures will be taken to promote the growth of vegetation and repair of damage caused by erosion and sedimentation. The inspection will also provide recommendations for measures that need to be undertaken immediately, based on the experience and judgment of the inspector. Necessary follow up inspections will be made as necessary to verify that any maintenance, alteration, or repair measures are accomplished by methods acceptable by standard engineering practice.

Table 60-5 Soil Stabilization Schedule

Soil Disturbance Activity or Condition	Required Stabilization Time
Soil disturbance has ceased in areas greater than 2,000 square feet.	14 days
After construction of dikes, swales, diversions, and other concentrated flow areas	5 days
When slopes are steeper than 3 horizontal to1 vertical	7 days
When slopes are greater than 3% and longer than 150 feet.	14 days
Perimeter controls around soil stockpiles.	End of workday
Stabilization or covering of inactive stockpiles.	30 days
When land disturbance is completed, permanent soil stabilization must be installed.	30 days

SPILL AND SITE POLLUTION:

Should an accidental spill occur refer to material safety data sheets. Any spills of hazardous materials in quantities in excess of reportable quantities as defined by EPA or the state agency regulations, shall be immediately reported to the EPA National Response Center (800-424-8802) and Missouri Department of Natural Resources (573-634-2436). Reportable spills for petroleum products is greater than 50 gallons. All other reportable hazardous materials and their quantities may be found on the web site at http://www.dnr.mo.gov on the local number is 573-840-9750. Federal law requires the responsible party to report any release of oil if it reaches or threatens a sewer, lake, creek, stream, river, groundwater, wetlands, or area like a

An emergency spill kit is required to be onsite for all potential spills.

VEGETATION ESTABLISHMENT
For Urban Development Sites
APPENDIX A

SEEDING RATES:

PERMANENT:
Tall Fescue – 30 lbs./ac.
Smooth Brome – 20 lbs./ac.
Combined – Fescue @ 15 lbs./ac. AND Brome @ 10 lbs./ac.

TEMPORARY:
Wheat or Rye – 150 lbs./ac. (3.5 lbs. per s.f.)
Oats – 120 lbs./ac. (2.75 lbs. per s.f)

SEEDING PERIODS:
Fescue or Brome – March 1 to June 1
August 1 to October 1
Wheat or Rye – March 15 to November 1
Oats – March 15 to September 15

MULCH RATES:
100 lbs. per 1000 sq. ft. (4,356 lbs. per ac.)

FERTILIZER RATES:
Nitrogen 30 lbs./ac.
Phosphate 30 lbs./ac.
Potassium 30 lbs./ac.
Lime 600 lbs./ac. ENM*

* ENM = effective neutralizing material as per State evaluation of quarried rock.

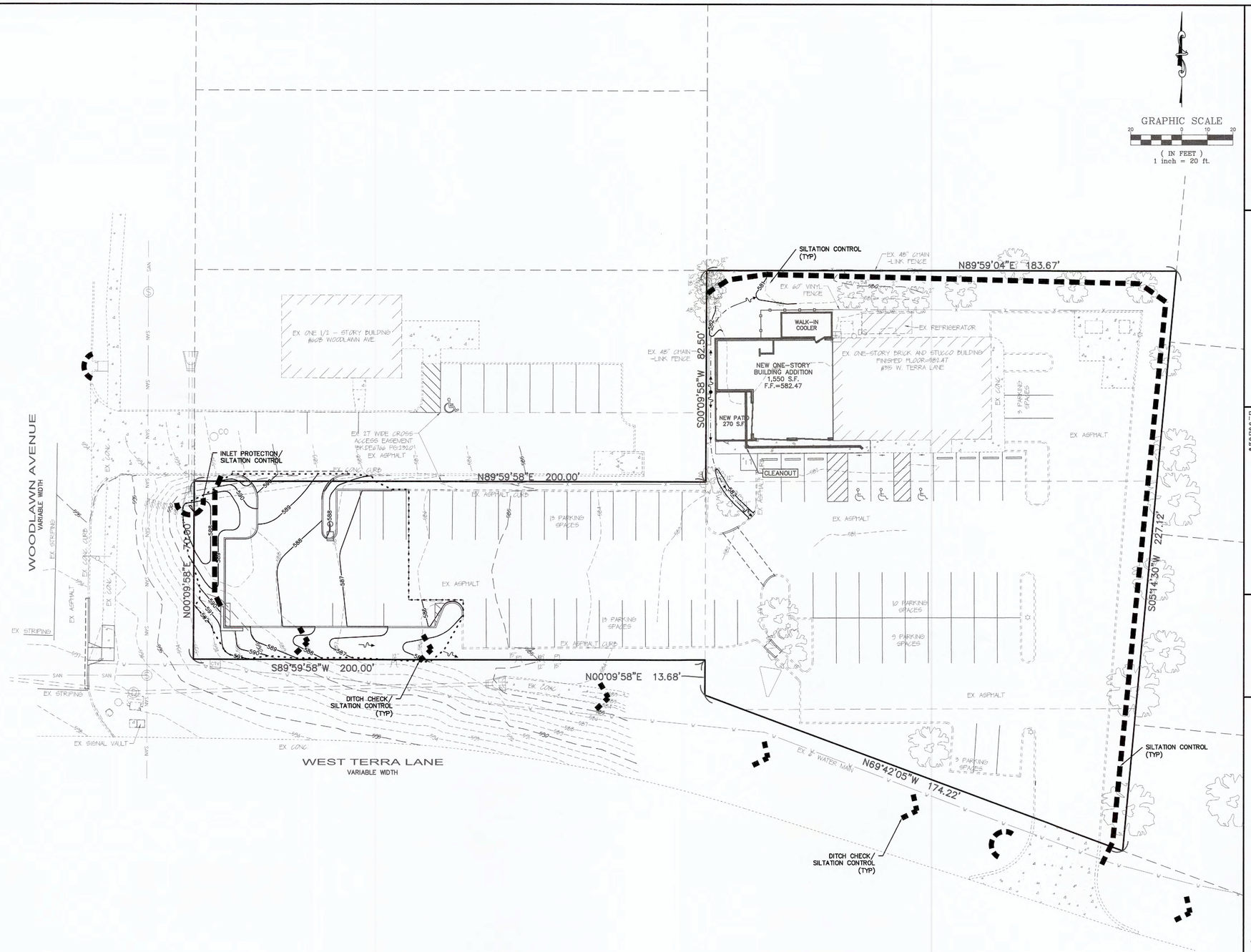

AS-BUILT WATERLINE PLAN

CALL BEFORE YOU DIG! 1-800-DIG-RITE

UNDERGROUND UTILITIES HAVE BEEN PLOTTED FROM AVAILABLE INFORMATION AND THEREFORE THEIR LOCATIONS SHALL BE CONSIDERED APPROXIMATE ONLY. THE VERIFICATION OF THE LOCATION OF ALL UNDERGROUND UTILITIES, EITHER SHOWN OR NOT SHOWN ON THESE PLANS SHALL BE THE RESPONSIBILITY OF THE CONTRACTOR, AND SHALL BE LOCATED PRIOR TO ANY GRADING OR CONSTRUCTION OF THE IMPROVEMENTS.

PROJECT TITLE:
EL TIO PEPE MEXICAN RESTAURANT
315 WEST TERRA LANE O'FALLON, ST. CHARLES, MISSOURI 63366

Box Project # 97-9351A | Issue Date: 04/12/2017

ENGINEERING PLANNING SURVEYING
221 Point West Blvd.
St. Charles, MO 63301
636-928-5652
FAX 928-1718

DISCLAIMER OF RESPONSIBILITY
I hereby specify that the documents intended to be authenticated by my seal are limited to this sheet, and I hereby disclaim any responsibility for all other Drawings, Specifications, Estimates, Reports or other documents or instruments relating to or intended to be used for any part or parts of the architectural or engineering project or [illegible]

STATE OF MISSOURI
CLIFFORD L. HEITMANN
NUMBER E-29817
REGISTERED PROFESSIONAL ENGINEER
CLIFFORD L. HEITMANN
CIVIL ENGINEER
E29817

Copyright 2017
Box Engineering Company, Inc.
Engineering Authority No. 000655
Surveying Authority No. 000144
All Rights Reserved

REVISIONS

09/19/17	CITY COMMENTS
10/04/17	CITY COMMENTS
08/08/19	AS-BUILT PLANS

Developer / Owner:
WR HOLMAN, LLC
2 HICKORY HILL DRIVE
O'FALLON, MISSOURI 63366
(636) 734-1815

SWPPP

P+Z No. 33-14.01

CUP No. 33-14.01.01

LANDSCAPE LEGEND

QTY. (7) ~	INDICATES SERVICEBERRY (MATURE HEIGHT = 15-20 FT TALL) (MIN. 2" CALIPER)
QTY. (1) ~	INDICATES EASTERN REDBUD (MATURE HEIGHT = 20-30 FT TALL) (MIN. 2" CALIPER)
QTY. (5) ~	INDICATES WINTERGREEN BOXWOOD (MATURE HEIGHT = 2-4 FT TALL)

LANDSCAPING AS DEPICTED IS SUBJECT TO FINAL DESIGN BY A QUALIFIED LANDSCAPE DESIGNER

* LANDSCAPING REQUIREMENTS:
STREET TREE REQUIREMENTS:
1 TREE FOR EVERY 40' OF FRONTAGE (ADDITIONAL PARKING AREA ONLY)
155' OF RIGHT-OF-WAY FRONTAGE = 155/40=3.875 ~ 4 STREET TREES REQUIRED
4 STREET TREES PROVIDED

INTERIOR LANDSCAPING REQUIRED:
NOT LESS THAN 6% OF INTERIOR PARKING LOT SHALL BE LANDSCAPED.
68 SPACES X 270 = 18,360 X 6% = 1,102 SQ.FT. LANDSCAPING REQUIRED
1200 SQ.FT LANDSCAPING PROVIDED INCLUDING 2 TREES & 5 SHRUBS

GRAPHIC SCALE
20 0 10 20
(IN FEET)
1 inch = 20 ft.

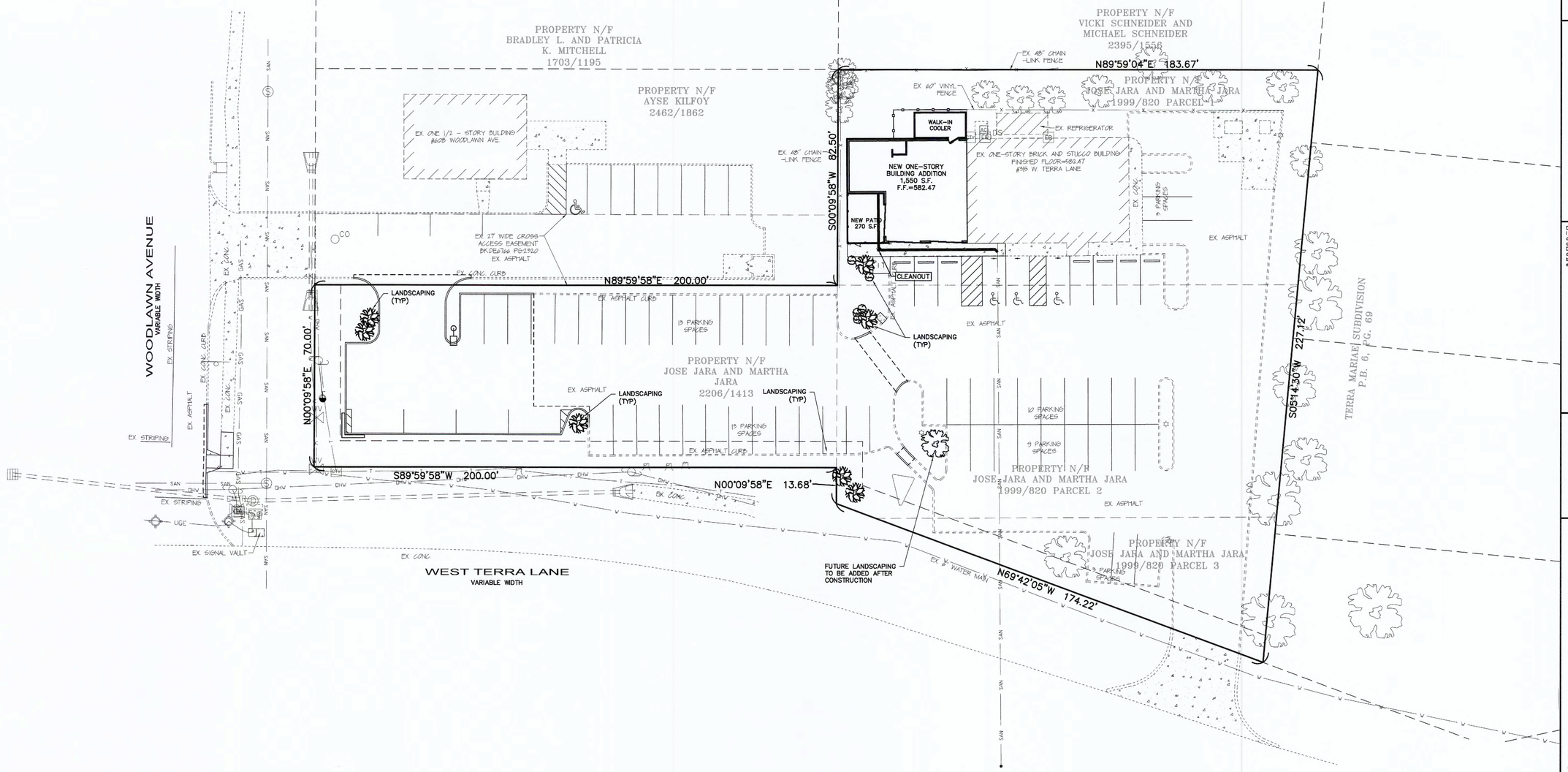

AS-BUILT WATERLINE PLAN

CALL BEFORE YOU DIG!
1-800-DIG-RITE

UNDERGROUND UTILITIES HAVE BEEN PLOTTED FROM AVAILABLE INFORMATION AND THEREFORE THEIR LOCATIONS SHALL BE CONSIDERED APPROXIMATE ONLY. THE VERIFICATION OF THE LOCATION OF ALL UNDERGROUND UTILITIES, EITHER SHOWN OR NOT SHOWN ON THESE PLANS SHALL BE THE RESPONSIBILITY OF THE CONTRACTOR, AND SHALL BE LOCATED PRIOR TO ANY GRADING OR CONSTRUCTION OF THE IMPROVEMENTS.

PROJECT TITLE:
EL TIO PEPE MEXICAN RESTAURANT

315 WEST TERRA LANE
O'FALLON, ST. CHARLES, MISSOURI 63366

Box Project # 97-9351A | Issue Date: 04/12/2017

ENGINEERING
PLANNING
SURVEYING
221 Point West Blvd.
St. Charles, MO 63301
636-928-5562
FAX 928-1718

DISCLAIMER OF RESPONSIBILITY
I hereby specify that the documents intended to be authenticated by my seal are limited to this sheet, and I hereby disclaim any responsibility for all other Drawings, Specifications, Estimates, Reports or other documents or instruments relating to or intended to be used for any purpose other than the architectural or engineering project herein.

STATE OF MISSOURI
CLIFFORD L. HEITMANN
NUMBER E-29817
REGISTERED PROFESSIONAL ENGINEER
5-1-19
CLIFFORD L. HEITMANN
CIVIL ENGINEER
E29817

Copyright 2017
Box Engineering Company, Inc.
Engineering Authority No. 000655
Surveying Authority No. 000144
All Rights Reserved

REVISIONS

09/19/17	CITY COMMENTS
10/04/17	CITY COMMENTS
08/08/19	AS-BUILT PLANS

Developer / Owner:
WR HOLMAN, LLC
2 HICKORY HILL DRIVE
O'FALLON, MISSOURI 63366
(636) 734-1815

LANDSCAPE PLAN

P+Z No. 33-14.01

CUP No. 33-14.01.01

LAST SAVE: 8/8/2019 BY: TMYERS LAST PLOT: 8/8/2019 BY: TONY MYERS
FILE LOCATION: \\VAULT\SERVER\CIVIL 3D PROJECTS\9351A 315 WEST TERRA\SURVEY\ASBUILTS\97-9351A CONTRACTOR ONLY AB FIRE LINE AND SEWER 4-1-19.DWG

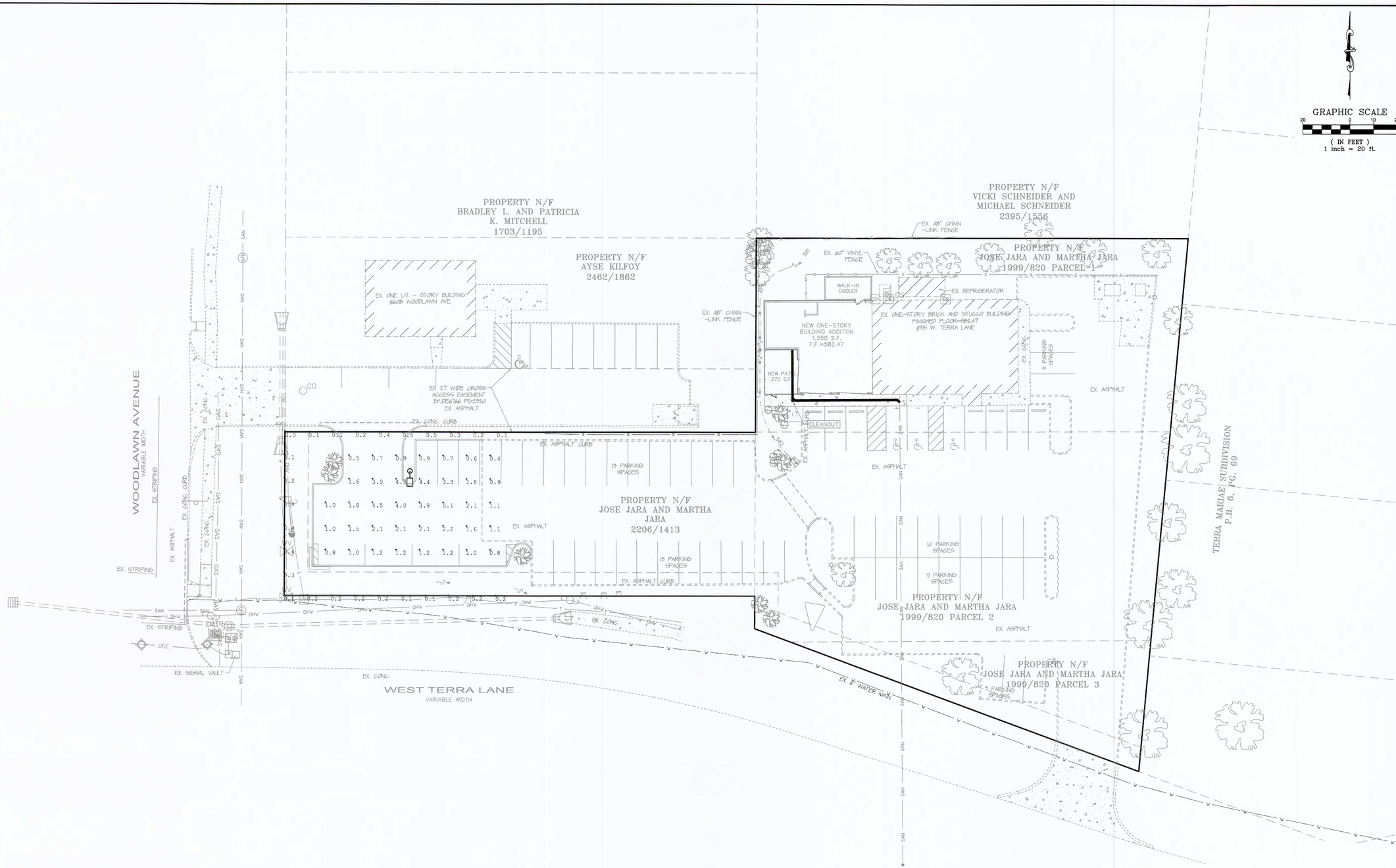

Calculation Summary							
Label	CalcType	Units	Avg	Max	Min	Avg/Min	Max/Min
CALC POINTS	Illuminance	Fc	1.84	5.1	0.4	4.60	12.75
PROPERTY LINE	Illuminance	Fc	0.23	0.5	0.0	N.A.	N.A.
INTERIOR LOT	Illuminance	Fc	1.84	5.1	0.4	4.60	12.75

Luminaire Schedule									
Symbol	Qty	Label	Arrangement	Total Lamp Lumens	LLF	Description	Total Watts	BUG Rating	Lum. Watts
	1	B	SINGLE	N.A.	0.950	VISIONAIRE PGR-1-T3-48LC-7-4K-VOLT-SINGLE @ 20' MTG. HT. (NEW LOCATION)	105	B1-U0-G2	105

AS-BUILT WATERLINE PLAN

CALL BEFORE YOU DIG! 1-800-DIG-RITE

UNDERGROUND UTILITIES HAVE BEEN PLOTTED FROM AVAILABLE INFORMATION AND THEREFORE THEIR LOCATIONS SHALL BE CONSIDERED APPROXIMATE ONLY. THE VERIFICATION OF THE LOCATION OF ALL UNDERGROUND UTILITIES, EITHER SHOWN OR NOT SHOWN ON THESE PLANS SHALL BE THE RESPONSIBILITY OF THE CONTRACTOR, AND SHALL BE LOCATED PRIOR TO ANY GRADING OR CONSTRUCTION OF THE IMPROVEMENTS.

PROJECT TITLE:
EL TIO PEPE MEXICAN RESTAURANT

315 WEST TERRA LANE
O'FALLON, ST. CHARLES, MISSOURI 63366

Box Project # 97-335A | Issue Date: 04/12/2017

ENGINEERING
PLANNING
SURVEYING
221 Point West Blvd.
St. Charles, MO 63301
636-928-5552
FAX 928-1718

DISCLAIMER OF RESPONSIBILITY
I hereby specify that the documents intended to be authenticated by my seal are limited to this sheet, and I hereby disclaim any responsibility for all other Drawings, Specifications, Estimates, Reports or other documents or instruments relating to or intended to be used for any part of the architectural or engineering project.

STATE OF MISSOURI
CLIFFORD L. HEITMANN
NUMBER E-29817
REGISTERED PROFESSIONAL ENGINEER
CLIFFORD L. HEITMANN
CIVIL ENGINEER
E29817

Copyright 2017
Box Engineering Company, Inc.
Engineering Authority No. 000655
Surveying Authority No. 000144
All Rights Reserved

REVISIONS

09/19/17	CITY COMMENTS
10/04/17	CITY COMMENTS
08/08/19	AS-BUILT PLANS

Developer / Owner:
WR HOLMAN, LLC
2 HICKORY HILL DRIVE
O'FALLON, MISSOURI 63366
(636) 734-1815

PHOTOMETRIC PLAN

P+Z No. 33-14.01

CUP No. 33-14.01.01

Page No. 18 of 18

LAST SAVED: 8/8/2019 BY:TNYERS
FILE LOCATION:\\VHALTER\PT\DWG, 3D PROJECTS\315W. TERRA\SURVEY\VISUAL\TS\97-335A CONTRACTOR ONLY #8 FIRE LINE AND SEWER 4-1-19.DWG
LAST PLOT: 8/8/2019 BY:TONY MYERS