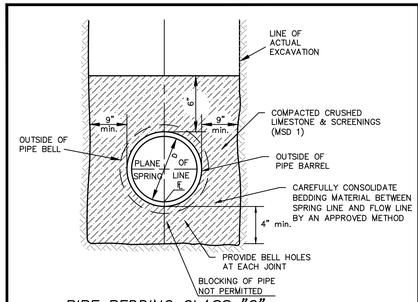

PIPE BEDDING CLASS "C"

(FOR ALL PIPE EXCEPT REINFORCED CONCRETE PIPE)

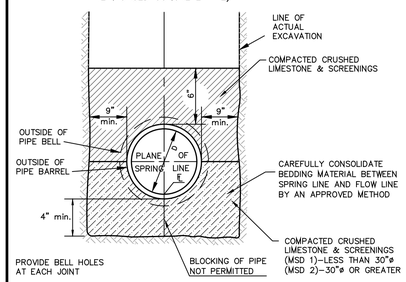

PIPE BEDDING CLASS "C"

(MODIFIED FOR REINFORCED CONCRETE PIPE)

PIPE BEDDING DETAILS

(PRIVATE STORM SEWER)

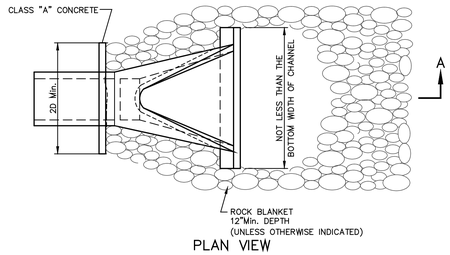

PLAN VIEW

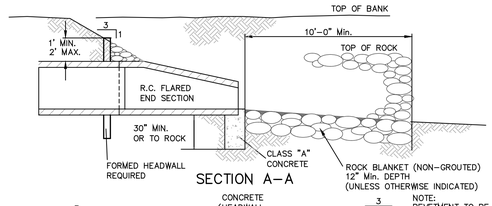

SECTION A-A

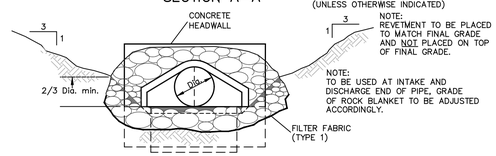

END VIEW

FLARED END SECTION

(FOR ONSITE USE ONLY)

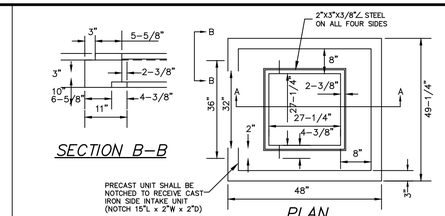

SECTION B-B

PLAN

NOTE: TOP ELEVATION IS TOP OF GRATE FLUSH WITH PAVEMENT

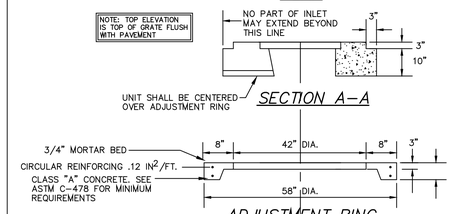

SECTION A-A

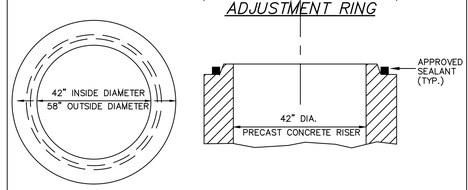

ADJUSTMENT RING

GRATE SEAT FOR 2-GRATE INLET WITH SIDE INTAKE

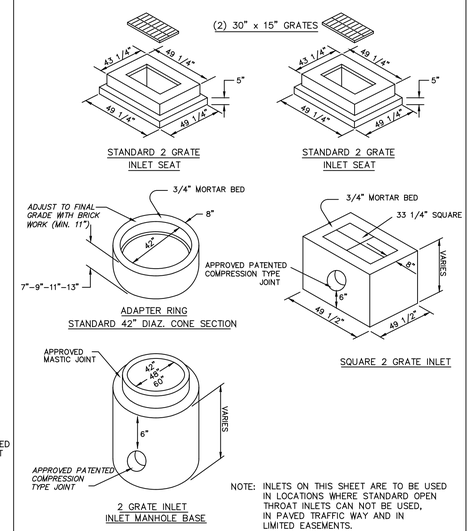

2 GRATE INLET

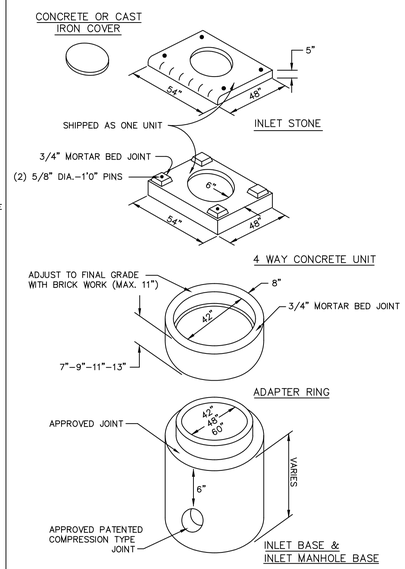

PRECAST AREA INLET

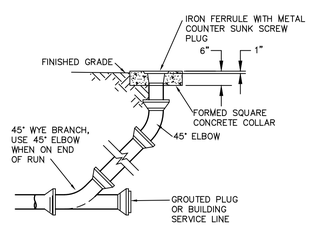

DETAIL OF SEWER CLEANOUT

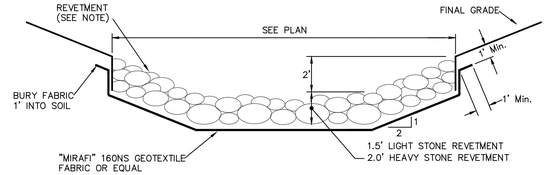

ROCK BLANKET NOTES:

1. *STONE FOR LIGHT STONE REVETMENT SHALL BE AT LEAST 6 INCH TO 8 INCH DIAMETER.*
2. *STONE FOR HEAVY STONE REVETMENT SHALL BE AT LEAST 12 INCH DIAMETER.*
3. *TOP OF REVETMENT TO BE PLACED TO MATCH PROPOSED GRADE AND NOT PLACED ON TOP OF PROPOSED GRADE.*

ROCK BLANKET DETAIL

(FOR LOCATIONS SEE PLANS)

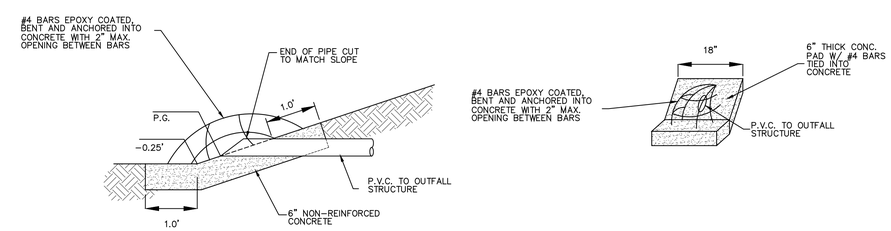

CONCRETE PAD FOR LOW FLOW

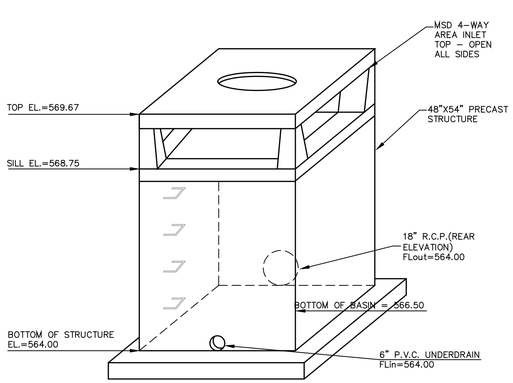

FRONT ELEVATION OF STRUCTURE

AREA INLET #14

(NOT TO SCALE)

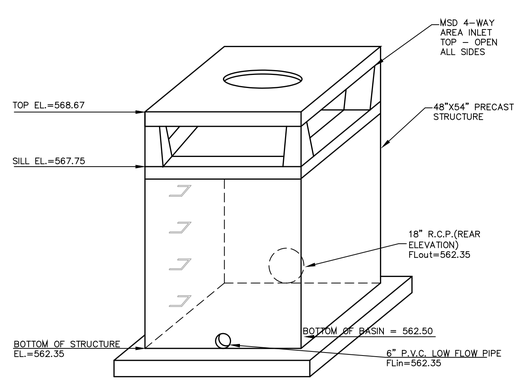

FRONT ELEVATION OF STRUCTURE

AREA INLET #16

(NOT TO SCALE)

BRANDON A. HARP, P.E. E-28650
PROFESSIONAL ENGINEER
CEDC LICENSE NO.: 2003004674

CEDC
CIVIL ENGINEERING
DESIGN CONSULTANTS
10820 Sunset Office Drive
Suite 200
Saint Louis, Missouri 63127
314.729.1400
Fax: 314.729.1404
www.cedc.net

Site Improvement Plan for a
STORAGE FACILITY
1160 Technology Drive
O'Fallon, Missouri 63368

Proj. # 1919

No.	Description	Date
	to City	7/29/19
	to Fire Dist.	10/30/19
	Agency Submittal	11/06/19
	To City	11/12/19
	To Utilities	11/19/19

SEWER DETAILS

C07