NOTE:
IF WATERTITE COVER REQUIRED USE APPROVED BUTYL RUBBER PREFORMED MASTIC SEALANT BETWEEN COVER AND FRAME.

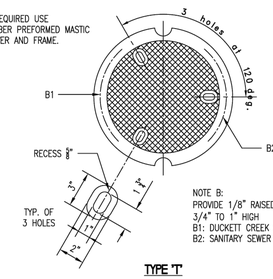

NOTE B:
PROVIDE 1/8" RAISED LETTERING APPROXIMATELY 3/4" TO 1" HIGH
B1: DUCKETT CREEK SANITARY DISTRICT
B2: SANITARY SEWER

TYPE 'T'

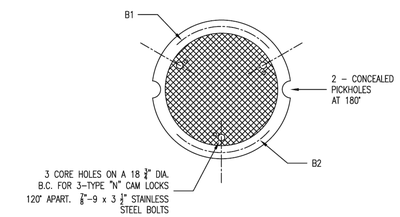

TYPE 'N'

Duckett Creek Sanitary District

Duckett Creek Sanitary District			
CAST IRON MANHOLE COVERS (LOCK TYPE)	Dwn By: BSM	App By: KLA	Detail No. 14
	Ckd By: MDOB	Date: 12/27/14	

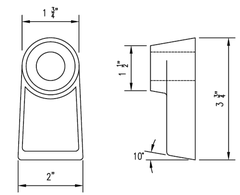

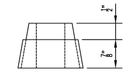

LOCK LUG
N.T.S.

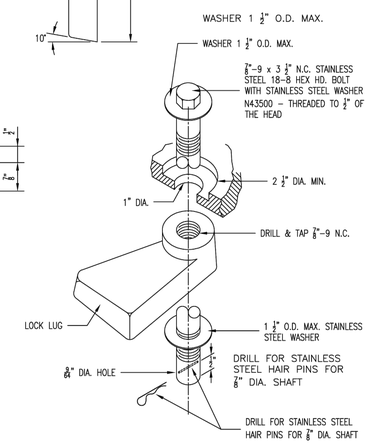

Duckett Creek Sanitary District

Duckett Creek Sanitary District			
LOCKING DEVICE FOR TYPE "N" LOCK TYPEMAN HOLE COVER	Dwn By: BSM	App By: KLA	Detail No. 16
	Ckd By: MDOB	Date: 12/28/00	

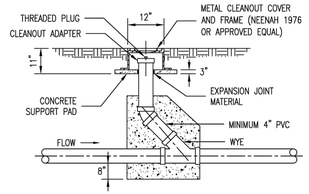

METAL FRAME AND COVER TYPE CLEANOUT

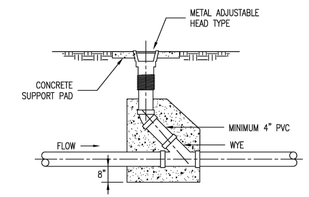

ADJUSTABLE HEAD TYPE CLEANOUT

Duckett Creek Sanitary District

Duckett Creek Sanitary District			
TYPICAL SEWER LATERAL CLEANOUT DETAIL	Dwn By: BSM	App By: KLA	Detail No. 25
	Ckd By: MDOB	Date: DEC. 2015	

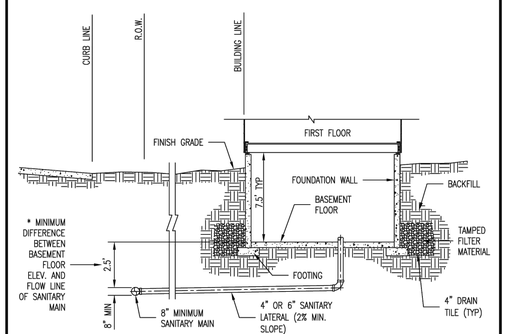

*NOTE:
DIFFERENCE IN DEPTH INCREASES WITH PIPE SIZE

Duckett Creek Sanitary District

Duckett Creek Sanitary District			
TYPICAL SANITARY SEWER LATERAL PROFILE	Dwn By: BSM	App By: KLA	Detail No. 26
	Ckd By: MDOB	Date: DEC. 2015	

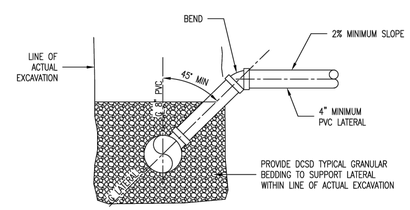

Duckett Creek Sanitary District

Duckett Creek Sanitary District			
SANITARY SEWER LATERAL RISER DETAIL	Dwn By: BSM	App By: KA	Detail No. 27
	Ckd By: MDOB	Date: DEC. 2015	

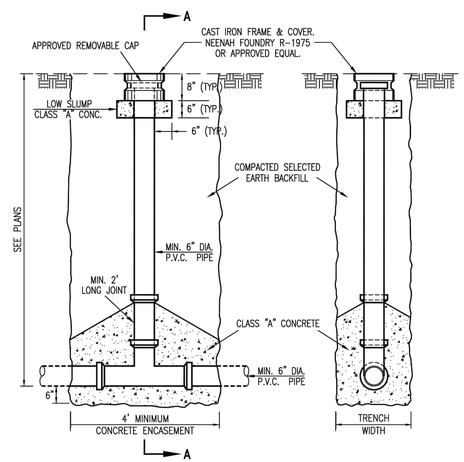

PLAN SECTION A-A

SAMPLING TEE DETAIL
N.T.S.

NOTES:
1. DO NOT USE WYES.

Duckett Creek Sanitary District

Duckett Creek Sanitary District			
SAMPLING TEE	Dwn By: MSM	App By: LRK	Detail No. 31
	Ckd By: LRK	Date: APRIL 2022	

PREMIER DESIGN GROUP
100 MIDLAND PARK DRIVE
WENTZVILLE, MO 63385
MISSOURI CERTIFICATE OF AUTHORITY #: 2003000031
MISSOURI CERTIFICATE OF AUTHORITY #: C2002007849

STATE OF MISSOURI
SCOTT FELDT
NUMBER PE-2021009371
4/19/24
PROFESSIONAL ENGINEER

ENGINEERS AUTHENTICATION
The responsibility for professional engineering liability on this project is hereby limited to the set of plans authenticated by the seal, signature, and date hereunder attached. Responsibility is disclaimed for all other engineering plans involved in this project and specifically excludes revisions, after this date, unauthenticated.
SCOTT FELDT P.E.
PROFESSIONAL ENGINEER
PE 2021009371

Project
RCP-N LLC
2892 HIGHWAY K SANITARY SEWER MAIN EXTENSION
2892 HIGHWAY K
O'FALLON, MO 63366
RCP-N LLC
660 OFFICE PARKWAY
CREVE COEUR, MO 63141

Date 4/19/2024

#	Revision Date	Description of Changes

Sheet Title
SANITARY SEWER DETAILS

Sheet Number
C-404

Project No.	2214120
Drawn By	D. STOSZ
Checked By	S. FELDT

NOT RELEASED FOR CONSTRUCTION

\\Vault-pc\vault\CIVIL 3D PROJECTS\2022\2214120_NP_2896 Hwy K\ENGINEERING\CONSTRUCTION DRAWINGS\SHEETS\C-403 SANITARY DETAILS.dwg