ROUND PIPE				HORIZONTAL ELLIPTICAL PIPE			
INSIDE DIAMETER OF PIPE (INCHES)	"W" PAYLINE WIDTH OF TRENCH (INCHES)	"W" PAYLINE WIDTH OF TRENCH (FEET)	PAY-VOLUMES CU. FT. PER FT. CONCRETE ENCASEMENT	INSIDE DIAMETER OF PIPE (INCHES)	"W" PAYLINE WIDTH OF TRENCH (INCHES)	"W" PAYLINE WIDTH OF TRENCH (FEET)	PAY-VOLUMES CU. FT. PER FT. CONCRETE ENCASEMENT
4	30	2.50	3.28				
6	30	2.50	3.59				
8	30	2.50	3.87				
10	30	2.50	4.09				
12	30	2.50	4.25				
15	36	3.00	5.55				
18	36	3.00	5.77	14 x 23	41	3.42	5.94
21	39	3.25	6.61				
24	42	3.50	7.39	19 x30	49	4.08	7.68
27	45	3.75	8.18	22 x 34	53	4.42	8.61
30	49	4.08	9.30	24 x 38	58	4.83	9.70
33	53	4.42	10.53	27 x 42	62	5.17	10.71
36	56	4.67	11.43	29 x 45	66	5.50	11.72
39	DISCONTINUED			32 x 49	71	5.92	13.14
42	63	5.25	13.38	34 x 53	75	6.25	14.05
48	70	5.83	15.67	38 x 60	83	6.92	16.18
54	77	6.42	18.15	43 x 68	92	7.67	18.81
60	84	7.00	20.73	48 x 76	101	8.42	21.59
66	91	7.58	23.45	53 x 83	109	9.08	24.35
72	98	8.17	26.37	58 x 91	118	9.83	27.45
78	105	8.75	29.39	63 x 98	126	10.50	30.50
84	112	9.33	32.57	68 x 106	135	11.25	33.91
90	119	9.92	35.90	72 x 113	143	11.92	36.99
96	126	10.50	39.37	77 x 121	152	12.67	40.69
102	133	11.08	42.99	82 x 128	160	13.33	44.45
108	140	11.67	46.75	87 x 136	168	14.00	47.79
114	147	12.25	50.66	92 x 143	176	14.67	51.70
120	154	12.83	54.72	97 x 151	185	15.42	56.01
126	161	13.42	58.92				
132	168	14.00	63.27	106 x 166	202	16.83	64.48
144	182	15.17	72.40	116 x 180	218	18.17	73.59

Duckett Creek Sanitary District

PAYLINE WIDTHS OF TRENCH AND PAY-QUANTITIES OF CONCRETE | Own By: BSM | App By: KLA | Ckd By: MDOB | Date: DEC. 2015 | Detail No. 1

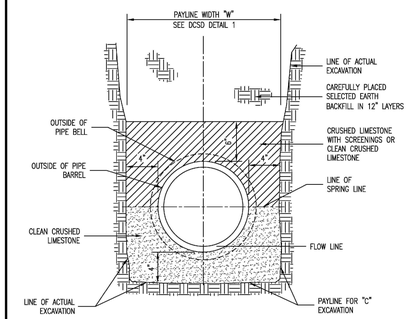

NOTES:
ALL PVC SANITARY SEWER PIPE SHALL CONFORM TO THE REQUIREMENTS OF ASTM D-3034 STANDARD SPECIFICATION FOR POLYVINYL CHLORIDE SEWER PIPE, SDR-35 OR EQUAL, WITH "CLEAN" 1/2 INCH TO 1 INCH GRANULAR STONE BEDDING UNIFORMLY GRADED. THIS BEDDING SHALL EXTEND FROM 4 INCHES BELOW THE PIPE TO SPRINGLINE OF PIPE. IMMEDIATE BACKFILL OVER PIPE SHALL CONSIST OF SAME SIZE "CLEAN" OR "MINUS" STONE FROM SPRINGLINE OF PIPE TO 6 INCHES ABOVE THE TOP OF PIPE. FINAL BACKFILL MATERIAL SHALL BE OF SUITABLE MATERIAL REMOVED FROM EXCAVATION EXCEPT AS OTHER MATERIAL IS SPECIFIED. DEBRIS, FROZEN MATERIAL, LARGE ROCKS OR STONES, OR OTHER UNSTABLE MATERIALS SHALL NOT BE USED WITHIN 2 FEET FROM TOP OF PIPE.

Duckett Creek Sanitary District

PIPE BEDDING CLASS "C" (FOR ALL EXCEPT REINFORCED CONCRETE PIPE) | Own By: BSM | App By: KA | Ckd By: MDOB | Date: JULY 2016 | Detail No. 3

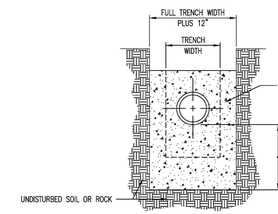

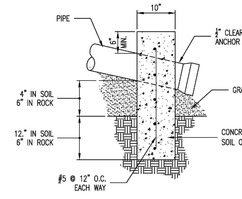

SIDE ELEVATION

ANCHOR SPACING	
SLOPE	MAX. DISTANCE
15%-35%	36"
35%-50%	24"
>50%	12" OR ONE PER JOINT OF PIPE

Duckett Creek Sanitary District

CONCRETE ANTI-SLIP COLLAR FOR PVC PIPE ON PIPE SLOPES FROM 15% TO 50% | Own By: MSM | App By: KA | Ckd By: | Date: DEC. 2015 | Detail No. 5

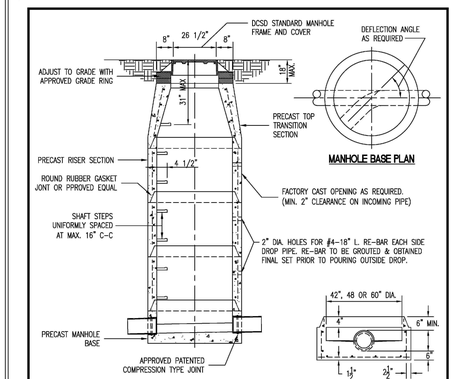

SECTION OF MANHOLE		MINIMUM DIMENSION
TOP TRANSITION	UPPER LOWER	26 1/2" DIA. 42" DIA.
BOTTOM SECTION	8" DIA. PIPE	42" DIA.
BOTTOM SECTION	10" THRU 36" DIA. PIPE	48" DIA.
BOTTOM SECTION	42" DIA. PIPE	60" DIA.

NOTES:
1. ALL INVERTS SHALL HAVE POSITIVE DRAINAGE THROUGH MANHOLE.
2. BRICK SHALL NOT BE USED ON MANHOLES.
3. NO SEWER, SERVICE CONNECTION OR DROP MANHOLE PIPE SHALL DISCHARGE ONTO THE SURFACE OF THE BENCH IN MANHOLES.

SEE A.S.T.M. C-478 FOR MINIMUM STEEL REQUIREMENTS.

Duckett Creek Sanitary District

PRECAST CONCRETE MANHOLE FOR SEWERS 8" THROUGH 42" | Own By: BSM | App By: LRK | Ckd By: MDOB | Date: MAY 2023 | Detail No. 7

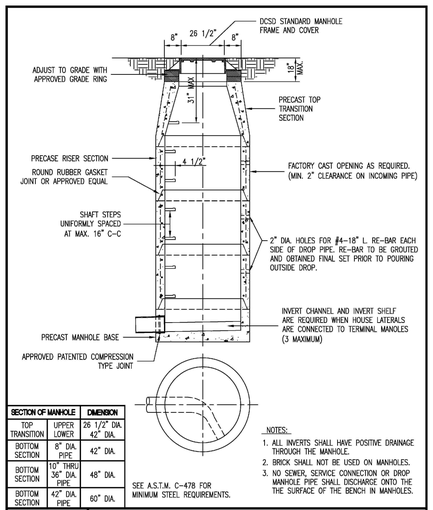

SECTION OF MANHOLE		DIMENSION
TOP TRANSITION	UPPER LOWER	26 1/2" DIA. 42" DIA.
BOTTOM SECTION	8" DIA. PIPE	42" DIA.
BOTTOM SECTION	10" THRU 36" DIA. PIPE	48" DIA.
BOTTOM SECTION	42" DIA. PIPE	60" DIA.

SEE A.S.T.M. C-478 FOR MINIMUM STEEL REQUIREMENTS.

NOTES:
1. ALL INVERTS SHALL HAVE POSITIVE DRAINAGE THROUGH THE MANHOLE.
2. BRICK SHALL NOT BE USED ON MANHOLES.
3. NO SEWER, SERVICE CONNECTION OR DROP MANHOLE PIPE SHALL DISCHARGE ONTO THE THE SURFACE OF THE BENCH IN MANHOLES.

Duckett Creek Sanitary District

TERMINAL MANHOLE FOR SEWERS 8" THROUGH 18" | Own By: MSM | App By: KLA | Ckd By: | Date: MAY 2023 | Detail No. 8

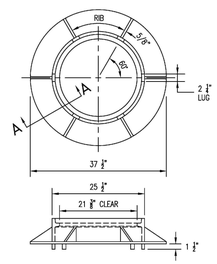

CAST IRON MANHOLE FRAME

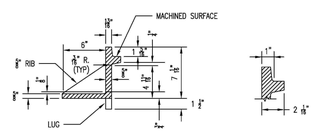

SECTION A-A
(230 lbs)

Duckett Creek Sanitary District

CAST IRON MANHOLE FRAME | Own By: BSM | App By: KLA | Ckd By: MDOB | Date: DEC. 2015 | Detail No. 11

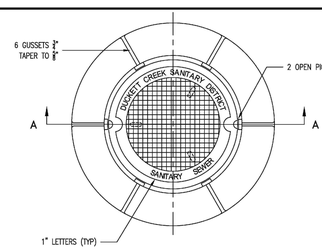

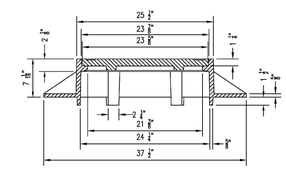

SECTION A-A

Duckett Creek Sanitary District

MANHOLE FRAME AND COVER | Own By: BSM | App By: KLA | Ckd By: MDOB | Date: DEC. 2015 | Detail No. 12

NOTE:
IF WATERTITE COVER REQUIRED USE APPROVED BUTYL RUBBER PREFORMED MASTIC SEALANT BETWEEN COVER AND FRAME.

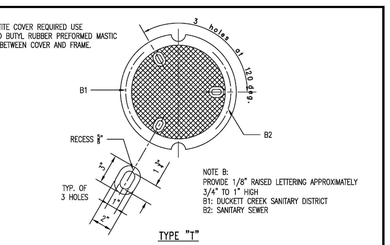

NOTE B:
PROVIDE 1/8" RAISED LETTERING APPROXIMATELY 3/4" TO 1" HIGH
B1: DUCKETT CREEK SANITARY DISTRICT
B2: SANITARY SEWER

TYPE "T"

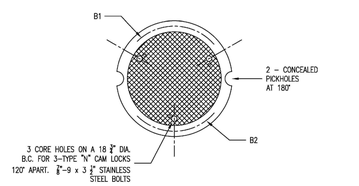

TYPE "N"

Duckett Creek Sanitary District

CAST IRON MANHOLE COVERS (LOCK TYPE) | Own By: BSM | App By: KLA | Ckd By: MDOB | Date: DEC. 2015 | Detail No. 14

PROJECT TITLE:
ASPEN ACADEMY
740 WELKER PARKWAY
O'FALLON, MISSOURI 63385

Bax Project # 24-19168 | Issue Date: 11/7/2024

ENGINEERING PLANNING SURVEYING
221 Point West Blvd.
St. Charles, MO 63301
636-928-5532
FAX 928-1718

REFERENCE DRAWINGS ONLY, ENGINEERS SEAL DOES NOT APPLY TO THESE DETAILS

REVISIONS

11-25-24	dcsd & pwsd2 comments
12-18-24	city comments

Developer / Owner:
VM MUELLER PROPERTIES LLC - MADELINE MUELLER
3298 DYER ROAD
O'FALLON, MISSOURI 63366
636-544-4357 - madeline.bathe@yahoo.com

DUCKETT CREEK SANITARY DISTRICT DETAILS

P+Z No. # 24-0025299
Approval Date: Sept 5, 2024
City No. #