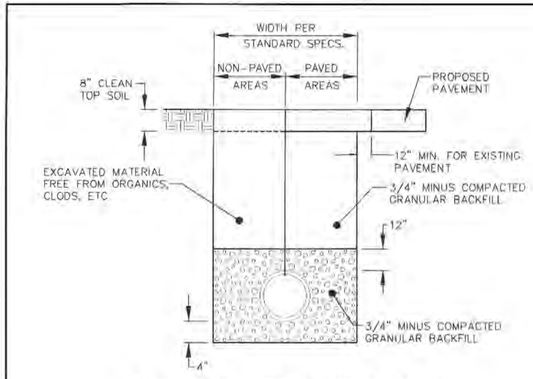

WATER LINE, PVC CONDUIT, SANITARY SEWER & STORM SEWER TRENCH BACKFILL

NOT TO SCALE

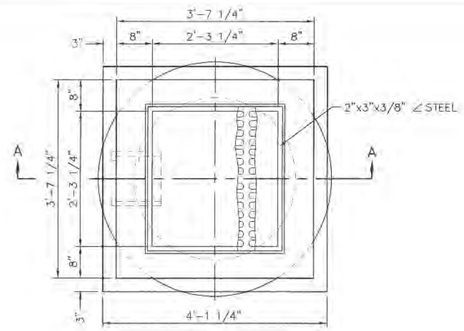

PLAN

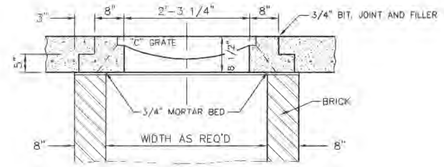

SECTION A–A

2 GRATE INLET

NOT TO SCALE

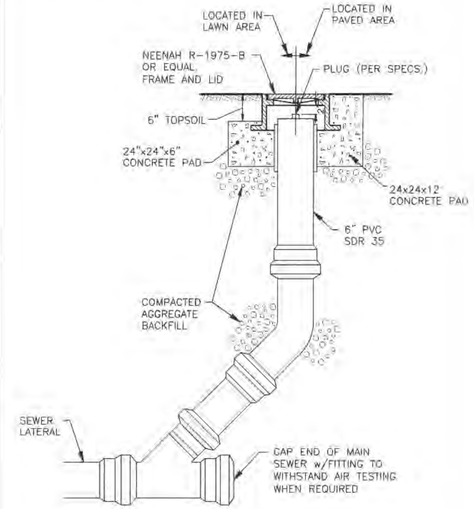

SEWER CLEANOUT

NOT TO SCALE

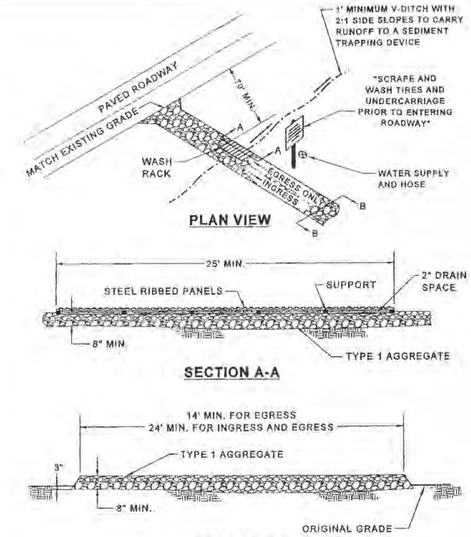

TRUCK WASHDOWN AREA

NOT TO SCALE

NOTE:
-ALL PRECAST CONCRETE SHALL HAVE REINFORCING IN ACCORDANCE WITH ACI 3871-71 OR EQUIVALENT.
-CONCRETE MANHOLE COVER SHALL NOT BE ALLOWED.
-A CITY OF O'FALLON APPROVED EPOXY ADHESIVE MARKING BY ACP INTERNATIONAL (www.acpinternational.com - CRYSTAL CAP, SD-W-CC) OR DAS MANUFACTURING, INC. (www.dasmanufacturing.com - STANDARD, #SDS) SHALL BE PROVIDED AT ALL STORM SEWER INLETS. PEEL AND STICK ADHESIVE PADS WILL NOT BE ALLOWED.

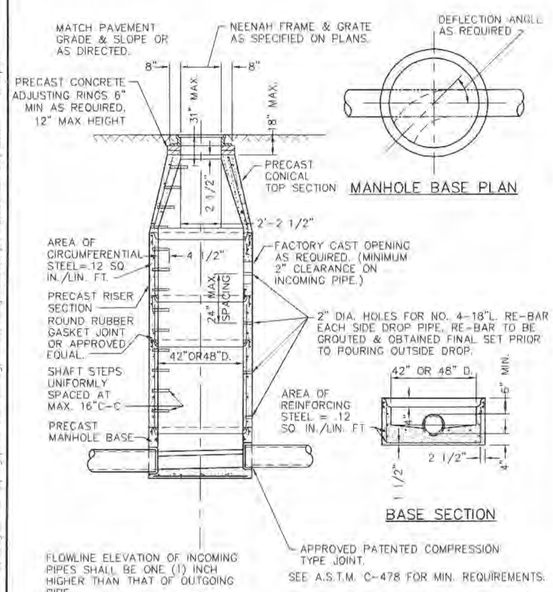

NOTE:

WHEN DIAMETER IS INCREASED FROM 4'-0", THE MINIMUM DIAMETER SHALL BE 12" LARGER THAN THE LARGEST PIPE SIZE. IN CASES WITH MULTIPLE PIPES ENTERING THE MANHOLE, THE DIAMETER SHALL BE SUFFICIENT TO PROVIDE A MINIMUM OF 6" PRECAST MANHOLE WALL BETWEEN ALL OUTSIDE EDGES OF PIPE.

MANHOLE

NOT TO SCALE

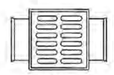

PLAN

NOTE:
-A CITY OF O'FALLON APPROVED EPOXY ADHESIVE MARKING BY ACP INTERNATIONAL (www.acpinternational.com - CRYSTAL CAP, SD-W-CC) OR DAS MANUFACTURING, INC. (www.dasmanufacturing.com - STANDARD, #SDS) SHALL BE PROVIDED AT ALL STORM SEWER INLETS. PEEL AND STICK ADHESIVE PADS WILL NOT BE ALLOWED.

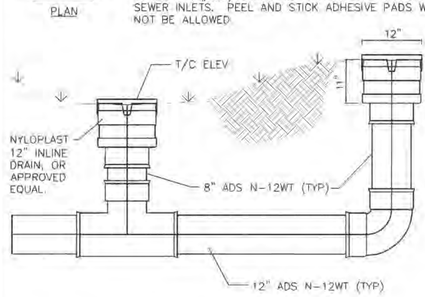

INLINE DRAIN

NOT TO SCALE

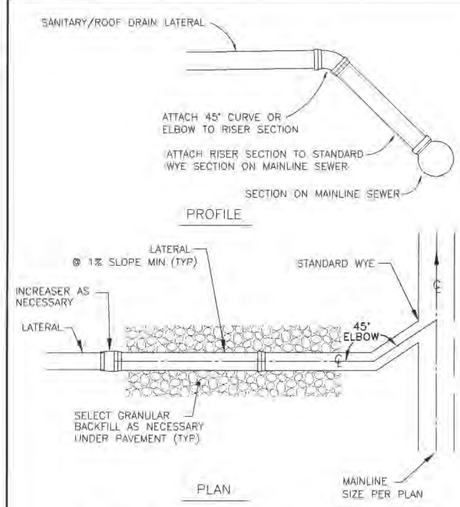

SANITARY/ROOF DRAIN LATERAL ALIGNMENT

NOT TO SCALE

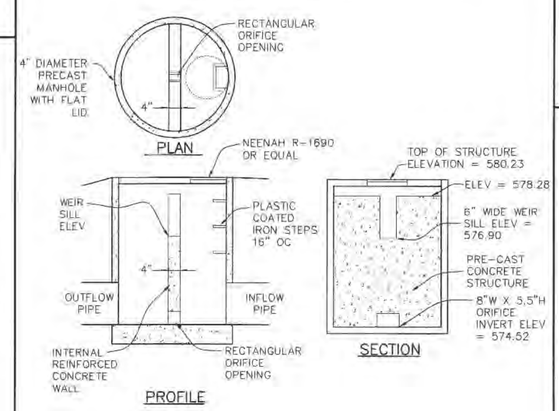

NOTE:

BOTTOM OF STRUCTURE SHALL BE SLOPED TO FOLLOW PIPE SLOPES TO MAINTAIN POSITIVE DRAINAGE THROUGH THE STRUCTURE.

PROVIDE 1/2" DIA STEEL ROD WITH 6" ANGLE ON ONE END AND "T" HANDLE 3' LONGER THAN THE STRUCTURE DEPTH. ROD SHALL BE SUPPLIED TO OWNER FOR STORAGE.

OUTLET STRUCTURE

NOT TO SCALE

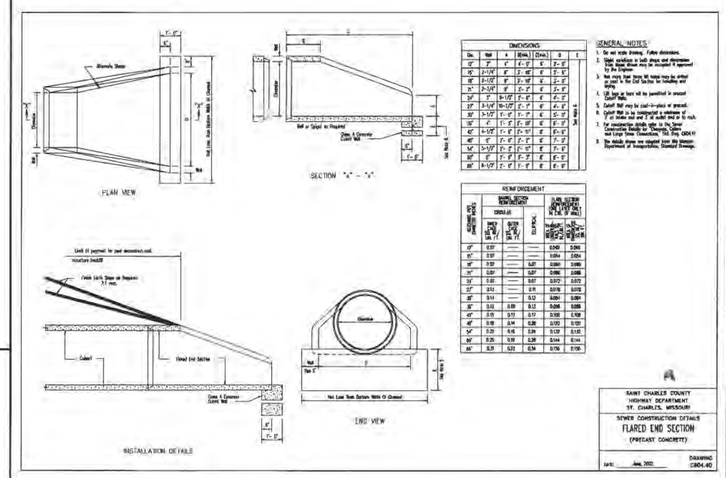

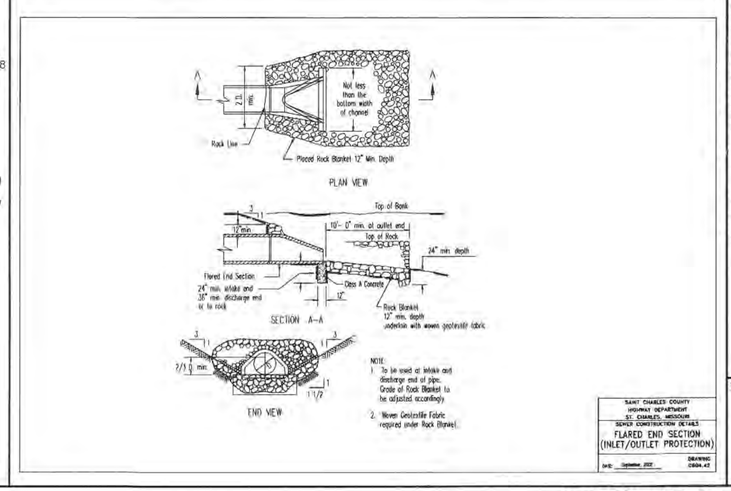

No.	DATE	REVISION
	5/5/06	REVS PER CITY COMMENTS
	4/24/06	OWNER/AGENCY REVIEW

PROJECT No: 64702
DATE APR 06
DES. JPS
DR. CAD
CKD. JPS

WOOLPERT, INC.
1910 Pine Street, Suite 420
Saint Louis, Missouri
63103-2254
314.241.3005
FAX: 314.436.0884
WOOLPERT

ALDI - O'FALLON, MO
ALDI, INC.
8615 VETERANS MEMORIAL PARKWAY
O'FALLON, MISSOURI 63366

DETAILS

SHEET NO.
C701

G:\SDI\Projects\ALDI\ALDI CIVIL\O'Fallon, MO\Design: 64702\dwg\64702-DET.dwg, Plotted By: brucec, Plotted: Jul 07, 2006 - 3:10pm

O'FALLON FILE #3905-DATE 2/22/06