| ROUND PIPE | | | | HORIZONTAL ELLIPTICAL PIPE | | | |
|---|---|---|---|---|---|---|---|
| INSIDE DIAMETER OF PIPE (INCHES) | "W" PAYLINE WIDTH OF TRENCH (INCHES) | "W" PAYLINE WIDTH OF TRENCH (FEET) | PAY-VOLUMES CU. FT. PER FT. CONCRETE ENCASEMENT | INSIDE DIMENSIONS OF PIPE (INCHES) | "W" PAYLINE WIDTH OF TRENCH (INCHES) | "W" PAYLINE WIDTH OF TRENCH (FEET) | PAY-VOLUMES CU. FT. PER FT. CONCRETE ENCASEMENT |
| 4 | 30 | 2.50 | 3.28 | | | | |
| 6 | 30 | 2.50 | 3.59 | | | | |
| 8 | 30 | 2.50 | 3.87 | | | | |
| 10 | 30 | 2.50 | 4.09 | | | | |
| 12 | 30 | 2.50 | 4.25 | | | | |
| 15 | 36 | 3.00 | 5.55 | | | | |
| 18 | 36 | 3.00 | 5.77 | 14 x 23 | 41 | 3.42 | 5.94 |
| 21 | 39 | 3.25 | 6.61 | | | | |
| 24 | 42 | 3.50 | 7.39 | 19 x 30 | 49 | 4.08 | 7.68 |
| 27 | 45 | 3.75 | 8.18 | 22 x 34 | 53 | 4.42 | 8.61 |
| 30 | 49 | 4.08 | 9.30 | 24 x 38 | 58 | 4.83 | 9.70 |
| 33 | 53 | 4.42 | 10.53 | 27 x 42 | 62 | 5.17 | 10.71 |
| 36 | 56 | 4.67 | 11.43 | 29 x 45 | 66 | 5.50 | 11.72 |
| 39 | DISCONTINUED | | | 32 x 49 | 71 | 5.92 | 13.14 |
| 42 | 63 | 5.25 | 13.38 | 34 x 53 | 75 | 6.25 | 14.05 |
| 48 | 70 | 5.83 | 15.67 | 38 x 60 | 83 | 6.92 | 16.18 |
| 54 | 77 | 6.42 | 18.15 | 43 x 68 | 92 | 7.67 | 18.81 |
| 60 | 84 | 7.00 | 20.73 | 48 x 76 | 101 | 8.42 | 21.59 |
| 66 | 91 | 7.58 | 23.45 | 53 x 83 | 109 | 9.08 | 24.35 |
| 72 | 98 | 8.17 | 26.37 | 58 x 91 | 118 | 9.83 | 27.45 |
| 78 | 105 | 8.75 | 29.39 | 63 x 98 | 126 | 10.50 | 30.50 |
| 84 | 112 | 9.33 | 32.57 | 68 x 106 | 135 | 11.25 | 33.91 |
| 90 | 119 | 9.92 | 35.90 | 72 x 113 | 143 | 11.92 | 36.99 |
| 96 | 126 | 10.50 | 39.37 | 77 x 121 | 152 | 12.67 | 40.69 |
| 102 | 133 | 11.08 | 42.99 | 82 x 128 | 160 | 13.33 | 44.45 |
| 108 | 140 | 11.67 | 46.75 | 87 x 136 | 168 | 14.00 | 47.79 |
| 114 | 147 | 12.25 | 50.66 | 92 x 143 | 176 | 14.67 | 51.70 |
| 120 | 154 | 12.83 | 54.72 | 97 x 151 | 185 | 15.42 | 56.01 |
| 126 | 161 | 13.42 | 58.92 | | | | |
| 132 | 168 | 14.00 | 63.27 | 106 x 166 | 202 | 16.83 | 64.48 |
| 144 | 182 | 15.17 | 72.40 | 116 x 180 | 218 | 18.17 | 73.59 |

TABLE 1
PAYLINE WIDTHS OF TRENCH AND PAY-QUANTITIES OF CONCRETE

METROPOLITAN ST. LOUIS SEWER DISTRICT
*Standard Details of Sewer Construction*

Dr. B.E.B. Ch. J.C.K. | 2009 | SHEET 1

NOTES:
1) INSIDE OF BRICK MANHOLE TO BE PLASTERED WITH 1/2" MIN. 1 TO 3 CEMENT TO SAND MORTAR MIX TO TOP OF HIGHEST PIPE.
2) MANHOLE STEPS UNIFORMLY SPACED AT MAX. 16" C-C.
3) INVERT CHANNEL AND INVERT SHELF ARE REQUIRED WHEN HOUSE LATERALS ARE CONNECTED TO TERMINAL MANHOLES. (3 MAX.)
4) THE MINIMUM INSIDE DIAMETER FOR THE BASE AND RISER SECTIONS SHALL BE 42 INCHES FOR 8 INCH DIAMETER SANITARY SEWERS AND ALL STORM SEWERS. THE MINIMUM INSIDE DIAMETER FOR SANITARY SEWERS LARGER THAN 8 INCH DIAMETER IS 48 INCHES.

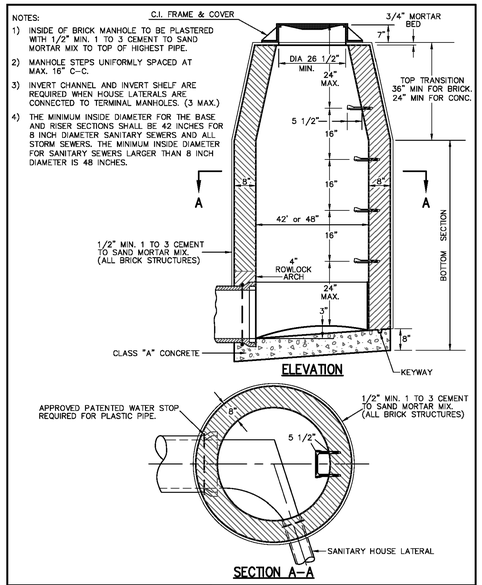


TERMINAL MANHOLE

METROPOLITAN ST. LOUIS SEWER DISTRICT
*Standard Details of Sewer Construction*

Dr. WSH/SAM Ch. J.C.K. | 2009 | SHEET 20

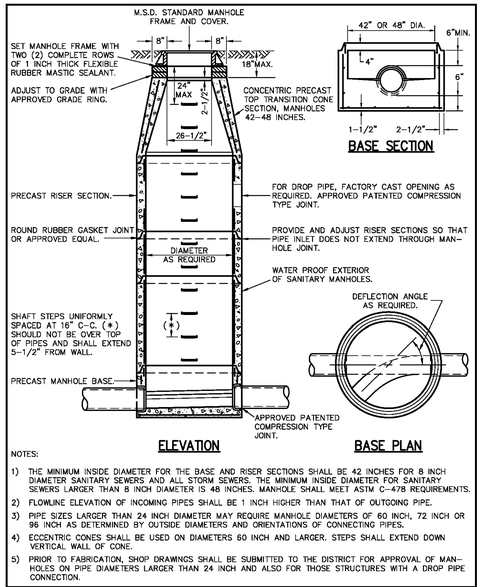


NOTES:
1) THE MINIMUM INSIDE DIAMETER FOR THE BASE AND RISER SECTIONS SHALL BE 42 INCHES FOR 8 INCH DIAMETER SANITARY SEWERS AND ALL STORM SEWERS. THE MINIMUM INSIDE DIAMETER FOR SANITARY SEWERS LARGER THAN 8 INCH DIAMETER IS 48 INCHES. MANHOLE SHALL MEET ASTM C-478 REQUIREMENTS.
2) FLOWLINE ELEVATION OF INCOMING PIPES SHALL BE 1 INCH HIGHER THAN THAT OF OUTGOING PIPE.
3) PIPE SIZES LARGER THAN 24 INCH DIAMETER MAY REQUIRE MANHOLE DIAMETERS OF 60 INCH, 72 INCH OR 96 INCH AS DETERMINED BY OUTSIDE DIAMETERS AND ORIENTATIONS OF CONNECTING PIPES.
4) ECCENTRIC CONES SHALL BE USED ON DIAMETERS 60 INCH AND LARGER. STEPS SHALL EXTEND DOWN VERTICAL WALL OF CONE.
5) PRIOR TO FABRICATION, SHOP DRAWINGS SHALL BE SUBMITTED TO THE DISTRICT FOR APPROVAL OF MAN-HOLES ON PIPE DIAMETERS LARGER THAN 24 INCH AND ALSO FOR THOSE STRUCTURES WITH A DROP PIPE CONNECTION.

PRECAST CONCRETE MANHOLE

METROPOLITAN ST. LOUIS SEWER DISTRICT
*Standard Details of Sewer Construction*

Dr. WSH/SAM Ch. J.C.K. | 2009 | SHEET 21 (REV)

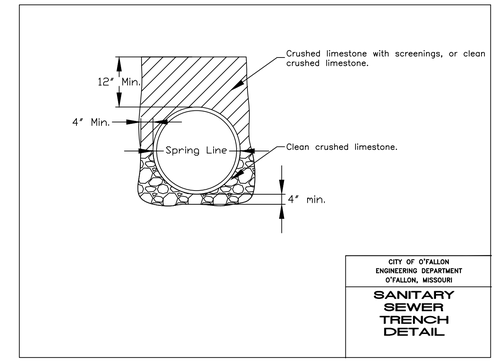


CITY OF O'FALLON
ENGINEERING DEPARTMENT
O'FALLON, MISSOURI

SANITARY SEWER TRENCH DETAIL

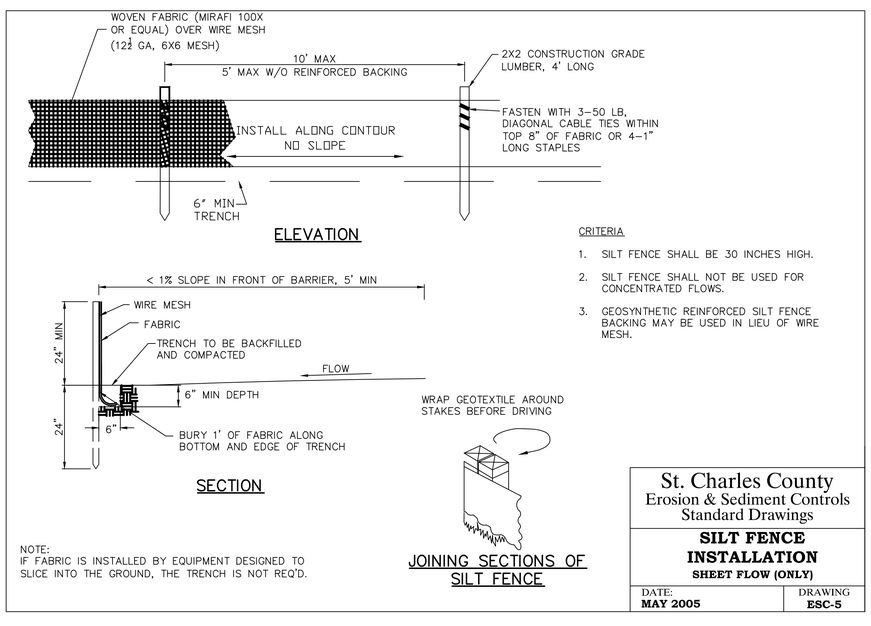


CRITERIA

1. SILT FENCE SHALL BE 30 INCHES HIGH.
2. SILT FENCE SHALL NOT BE USED FOR CONCENTRATED FLOWS.
3. GEOSYNTHETIC REINFORCED SILT FENCE BACKING MAY BE USED IN LIEU OF WIRE MESH.

NOTE:
IF FABRIC IS INSTALLED BY EQUIPMENT DESIGNED TO SLICE INTO THE GROUND, THE TRENCH IS NOT REQ'D.

St. Charles County
Erosion & Sediment Controls
Standard Drawings

**SILT FENCE INSTALLATION**
**SHEET FLOW (ONLY)**

DATE: **MAY 2005** | DRAWING **ESC-5**

www.invarion.com

## 616.8.33 (TA-33) Stationary Lane Closure on a Divided Highway - DE/CM

| SPEED | SIGN SPACING (ft.) | | TAPER LENGTH (ft.) | | OPTIONAL | CHANNELIZER SPACING (ft.) | |
|---|---|---|---|---|---|---|---|
| Permanent Posted (mph) | Undivided (S) | Divided (S) | Shoulder (1) (T1) | Lane (2) (T2) | BUFFER LENGTH (ft.) (B) | Tapers | Buffer/ Work Areas |
| 0-35 | - | 200 | 70 | 245 | 280 | 35 | 40 |
| 40-45 | - | 500 | 150 | 540 | 400 | 40 | 80 |
| 50-55 | - | 1000 | 185 | 660 | 560 | 50 | 80 |
| 60-70 | - | SA - 1000<br>SB - 1500<br>SC - 2640 | 235 | 840 | 840 | 60 | 120 |

1 Shoulder taper length based on 10 ft. (standard shoulder width) offset. 2. Lane taper length based on 12 ft. (standard lane width) offset.

**Notes:**

See EPG 616.12 Work Zone Speed Limits for speed limit guidelines.

Temporary pavement marking required with long term closures.

Remove and/or modify any existing pavement marking as needed.

This information also shall be used when work is being performed in the lane adjacent to the median on a divided highway. In this case, the LEFT LANE CLOSED signs and the corresponding Merge or Lane Ends signs shall be substituted.

When a side road intersects the highway within the TTC zone, additional TTC devices shall be placed as needed.

Temporary traffic barriers, if used, shall comply with the provisions in EPG 616.6.85 Temporary Traffic Barrier and review EPG 616.8.34 (TA-34) Lane Closure with a Temporary Traffic Barrier.

Review EPG 616.8.34a (TA-34a) Lane Closure with Width and Lane Restrictions - DE/CM for a lane closure with width restriction.

An arrow board shall be used when a freeway lane is closed. When more than one freeway lane is closed, a separate arrow board shall be used for each closed lane.

Review EPG 616.6.83 Warning Lights when sequential or warning lights should be used on nighttime operations.

If rumble strips are used, review EPG 616.6.87 Rumble Strips.

For flags and advance warning rail system, refer to EPG 616.6.2.2 Flags and Advance Warning Rail System.

Review EPG 616.6.63 Channelizing Devices for different types and guidelines for the devices.

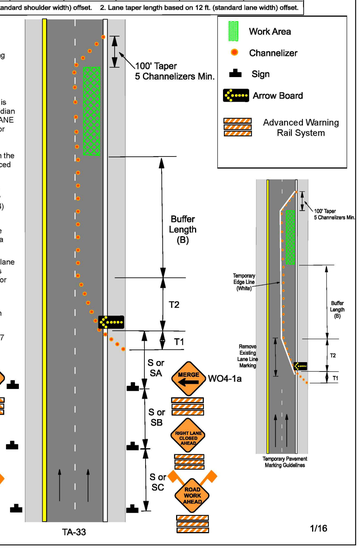


ENGINEERS SEAL DOES NOT APPLY TO STANDARD DETAILS BY OTHERS ON THIS SHEET.

A SET OF CONSTRUCTION PLANS FOR
SANITARY SEWER & WATER MAIN EXTENSIONS FOR
*ALPINE WOODS*
*#1601 BELLEAU CREEK ROAD*
*ST. CHARLES COUNTY, MO 63366*

PREPARED FOR:
TOM GLOSIER
3532 CARVER BOULEVARD
ST. CHARLES, MO 63301
636-397-4471


*ENGINEERING*
*PLANNING*
*SURVEYING*
221 Point West Blvd.
St. Charles, MO 63301
636-928-5552
FAX 928-1718

Bax Engineering Company, Inc.
Missouri State Certificate of Authority Engineering #000655
Missouri State Certificate of Authority Surveying #000144


*REVISIONS*

| | |
|---|---|
| 05/18/23 | CITY COMMENTS |
| 06/13/23 | CLIENT COMMENTS |
| 06/15/23 | CLIENT COMMENTS |
| 08/11/23 | CITY OF O'FALLON & ST. PETERS COMMENTS |
| 10/26/23 | CITY OF O'FALLON & ST. PETERS COMMENTS |
| 11/14/23 | CITY OF O'FALLON & ST. PETERS COMMENTS |
| 12/05/23 | CITY OF ST. PETERS COMMENTS |


DISCLAIMER OF RESPONSIBILITY
I hereby disclaim any responsibility for all other drawings, specifications, estimates, reports or other documents or instruments relating to or intended to be used for any part or parts of the architectural or engineering project or survey other than these authenticated by my seal.


12/06/2022
*DATE*

22-18692
*PROJECT NUMBER*

18692CON.DWG
*FILE NAME*

CLM
*DRAWN*

JBS JBS
*DESIGNED CHECKED*

CONSTRUCTION DETAILS

C-7