ISSUE	REMARKS/DATE
1	INITIAL SUBMITTAL
2	9-23-20 Rev Ducket Creek Cmmnt.
3	20201001 Rev per City/Duckett/PWSD#2
4	20201014 Rev per Duckett
5	20201020 Rev per City Comments
6	20201102 Rev per DCSD Comments
7	20201106 Rev per City Comments

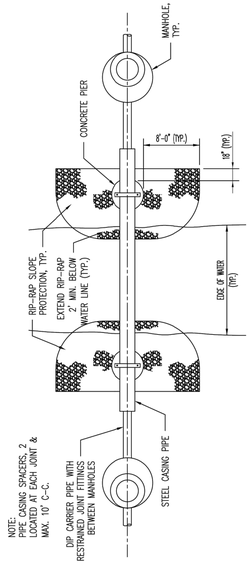

Duckett Creek Sanitary District

ARIEL CROSSING TYPICAL PLAN

Dwn By: MSM | Ckd By: | App By: KA | Date: JULY 2016 | Detail No. 30A

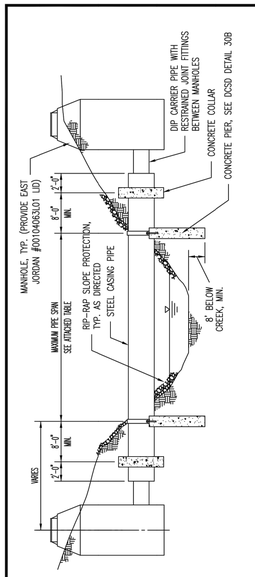

NOTES:

1. STEEL PIPE SHALL BE EITHER SPIRAL WELDED OR SMOOTH WALL SEAMLESS WITH A MINIMUM YELD STRENGTH OF 35,000 PSI.
2. DUCTILE IRON PIPE SHALL BE SUPPORTED WITH TWO CASING SPACERS AT EVERY JOINT WITHIN THE CASING PIPE USING APPROVED ALIGNMENT GUIDE. ALL JOINTS SHALL BE RESTRAINED.
3. EXPOSED AREAS SHALL NOT REMAIN UNPROTECTED FOR MORE THAN SEVEN (7) DAYS FOR THE PROTECTION OF THE STREAM.

CARRIER PIPE, DIP PIPE, STEEL CASING DIAMETER (IN.)	MINIMUM CASING PIPE WALL THICKNESS (IN.)	ALLOWABLE SPAN (FT.)
8	0.2500	45
10	0.3125	50
12	0.3125	50
14	0.3125	55
16	0.3750	55
18	0.3750	60
20	0.3750	60
24	0.4375	65
30	0.4375	65

Duckett Creek Sanitary District

ARIEL CROSSING TYPICAL PROFILE

Dwn By: MSM | Ckd By: | App By: KA | Date: OCT. 2016 | Detail No. 30B

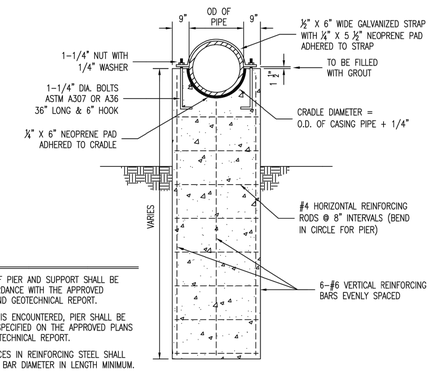

NOTES:

1. DEPTH OF PIER AND SUPPORT SHALL BE IN ACCORDANCE WITH THE APPROVED PLANS AND GEOTECHNICAL REPORT.
2. IF ROCK IS ENCOUNTERED, PIER SHALL BE SET AS SPECIFIED ON THE APPROVED PLANS AND GEOTECHNICAL REPORT.
3. ALL SPLICES IN REINFORCING STEEL SHALL BE 30 X BAR DIAMETER IN LENGTH MINIMUM.
4. MINIMUM COVER OVER PRIMARY REINFORCING SHALL BE 2".
5. CONCRETE ULTIMATE COMPRESSIVE STRENGTH OF 3,000 PSI MINIMUM.
6. REINFORCING STEEL SHALL BE GRADE 60.

Duckett Creek Sanitary District

AERIAL PIPE CROSSING CONCRETE PIER DETAIL

Dwn By: MSM | Ckd By: | App By: KA | Date: JULY 2016 | Detail No. 30C

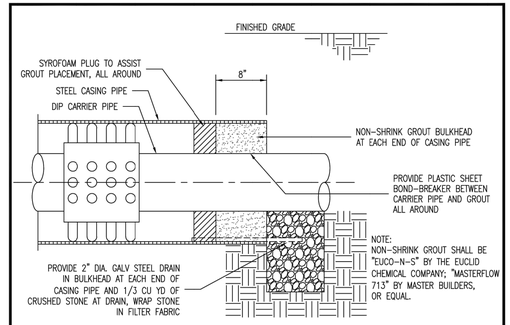

TYPICAL CASING PIPIE PLUG

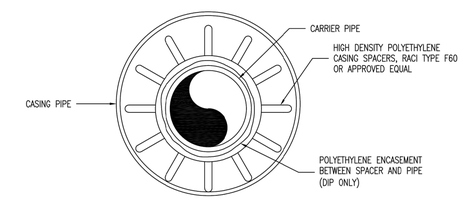

PIPE ALIGNMENT GUIDE

Duckett Creek Sanitary District

AERIAL PIPE CROSSING CASING PIPE DETAILS

Dwn By: MSM | Ckd By: | App By: KA | Date: JULY 2016 | Detail No. 30D

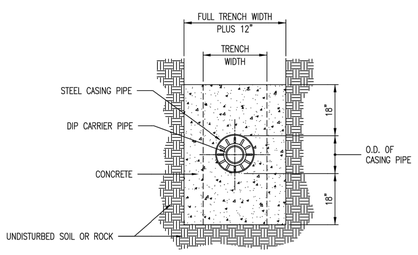

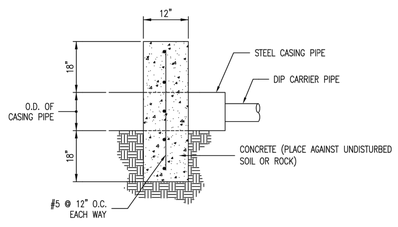

SIDE ELEVATION

Duckett Creek Sanitary District

AERIAL CROSSING CONCRETE COLLAR DETAIL

Dwn By: MSM | Ckd By: | App By: KA | Date: JULY 2016 | Detail No. 30E

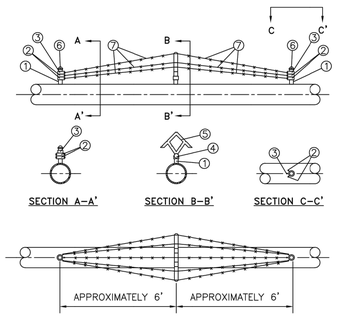

BILL OF MATERIAL

NO.	QTY	STK. NO.	SIZE	DESCRIPTION
1	6*	38290	1¼" x 5"	NIPPLE, STL. SCRD.
2	8	BARRICADE KIT STOCK #59850	1⅝"OD,#7 90°	BRACE BAND, GALV.
3	4		1⅝"OD, #6	BRACE BAND, GALV.
4	2		1⅝"OD x 59U	UNIVERSAL BASE, GALV.
5	2		NORTHLAND 5 STRD.	ARM, STL., GALV. W/BOLT
6	4		NORTHLAND #1	CAP, ACORN, GALV. W/SET SCREW
7	1**	59850	4 POINT, 12½ GAUGE	WIRE, BARBED, GALV.

* 1¼" BARE PIPE ON JOB MAY BE SUBSTITUTED FOR 1¼" x 5" NIPPLE. SCREW THREADS NOT NECESSARY.

** CONTACT SUPERVISOR BEFORE ORDERING BARBED WIRE. BARBED WIRE SUPPLIED IN 1320' ROLLS ONLY, NOT RETURNABLE.

NOTES:

1. "BILL OF MATERIALS" PROVIDES SUFFICIENT MATERIAL FOR TWO BARRICADES.
2. LOCATION OF BARRICADES ON PIPING SYSTEM TO BE AS SPECIFIED ON APPROVED CONSTRUCTION DRAWINGS.
3. TWO BARRICADES WILL BE REQUIRED, ONE AT EACH END OF THE CROSSING AS A DETERRENT AGAINST FOOT TRAFFIC. IN SOME INSTANCES ADDITIONAL BARRICADES MAY BE REQUIRED.
4. COAT ANY EXPOSED PIPE WITH MASTIC, STOCK #51857.

Duckett Creek Sanitary District

AERIAL CROSSING BARRIER DETAIL

Dwn By: BSM | Ckd By: | App By: KA | Date: DEC. 2015 | Detail No. 30F

ERGO Assembly

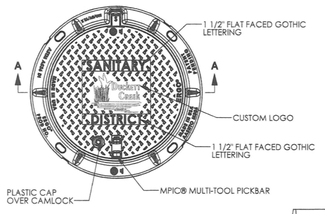

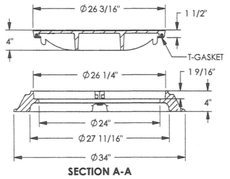

SECTION A-A

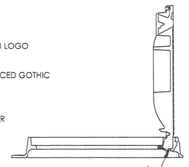

SAFETY LOCK@90°

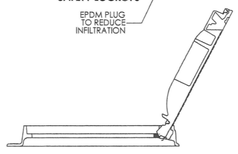

FULLY OPENED@120°

ej

Product Number
00104063L01
Design Features
-Materials
Cover
Ductile Iron (80-55-06)
Frame
Ductile Iron (80-55-06)

-Design Load
Heavy Duty
-Open Area
n/a
-Coating
Undipped
-√ Designates Machined Surface

Certification
-ASTM A536
-
-
-Country of Origin: USA

Major Components
LC00104063
LF240403403

Drawing Revision
4/22/2010 Designer: DEF
Revised By:

Disclaimer
Weights (lbs/kg), dimensions (inches/mm) and drawings provided for your guidance. We reserve the right to modify specifications without prior notice.

CONFIDENTIAL: This drawing is the property of EJ Group, Inc. and embodies confidential information, registered marks, patents, trade secret information, and other proprietary data. It is the property of EJ Group, Inc.
Copyright © 2011 EJ Group, Inc.
All rights reserved.

Contact
800.626.4653
ejco.com

PROJECT TITLE

AMBERLEIGH
O'FALLON, MISSOURI

THE STERLING CO.
ENGINEERS & SURVEYORS
5055 New Baumgartner Road
St. Louis, Missouri 63129
Ph 314-487-0440 Fax 314-487-8944
www.sterling-eng-sur.com
Corporate Certificate of Authority #001348

The reproduction, alteration or copying of this drawing without the written consent of the engineer is prohibited. Any reuse of this drawing by others or any other person or firm without written authorization and specific verification of the adaptation by the engineer, shall be at the sole risk of the person or firm reusing the drawings or documents not bearing the seal and signature.

STATE OF MISSOURI
JASON D. HOWELL
NUMBER
PE-2007002801
PROFESSIONAL ENGINEER

Date: 5-18-2021
Jason D Howell
License No. PE 2007002801
Professional Engineer

LOMBARDO HOMES OF ST. LOUIS, LLC
2299 TECHNOLOGY DRIVE, SUITE 150
O'FALLON, MISSOURI 63368
Ph. 636-265-2710
Fax 636-695-3195

DUCKETT CREEK SANITARY SEWER DETAILS

P+Z No.	20-000028
City No.	20-003192
Date:	May 18, 2021
Job No.	14-04-136

Page No.
7.12
IMP

"FINAL PLAN" Approval Date: March 27, 2020

Drawing name: V:\1404136 Diehr Ct Hopewell Rd\Drawings\Engineering\Improvements\14136IMP.dwg Plotted on: Aug 27, 2021 - 12:38pm Plotted by: jdhowell