ASHFORD PLACE STORM PROFILES

Rev. 3-22-95, CMP, 4, 5, 95

SCALE: HORIZ. 1" = 50'
VERT. 1" = 10'

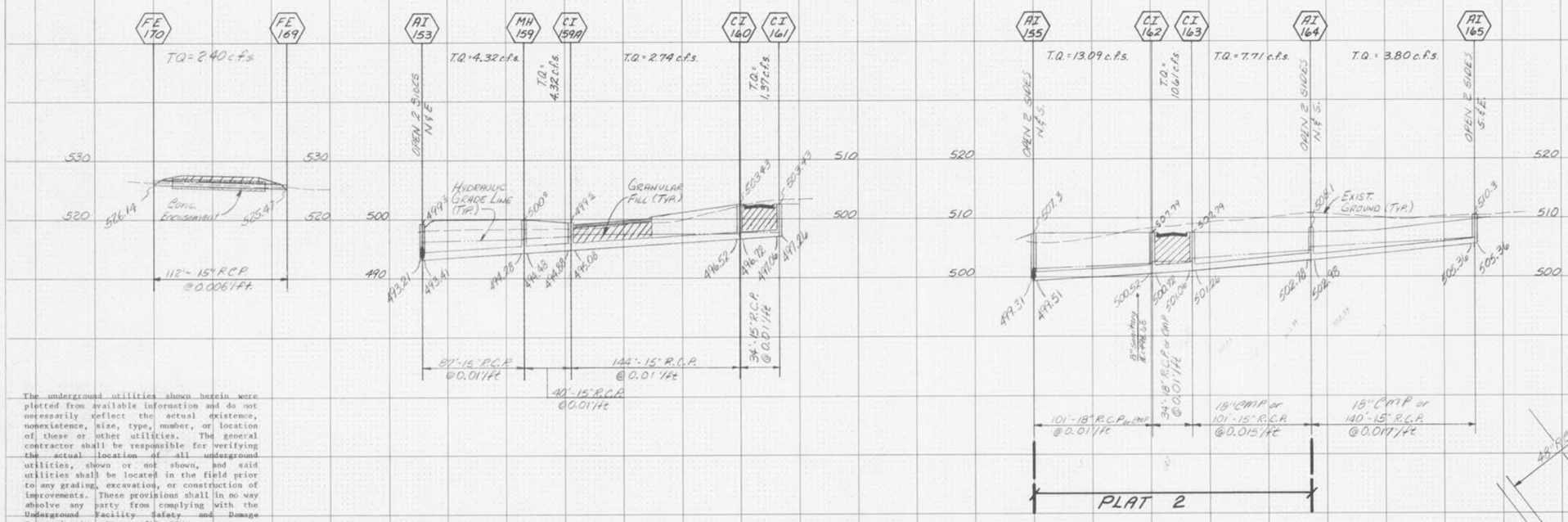

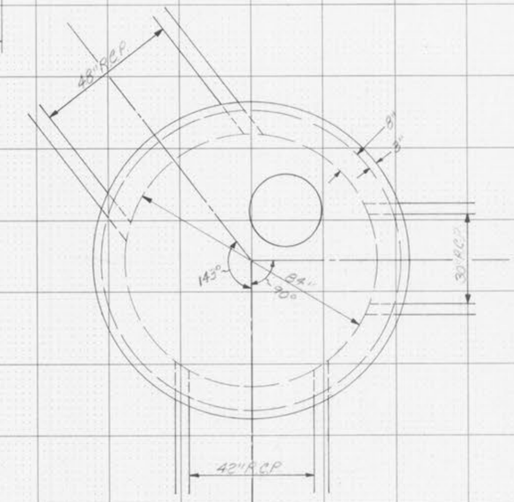

The underground utilities shown herein were plotted from available information and do not necessarily reflect the actual existence, nonexistence, size, type, number, or location of these or other utilities. The general contractor shall be responsible for verifying the actual location of all underground utilities, shown or not shown, and said utilities shall be located in the field prior to any grading, excavation, or construction of improvements. These provisions shall in no way absolve any party from complying with the Underground Facility Safety and Damage Prevention Act, Chapter 319, RSMo.

The use of High Density Polyethylene Corrugated Pipe with smooth interior wall will be permitted as an acceptable alternative to R.C.P. outside of Public R/W. Pipe shall meet ASTM D-2321 AASHTO M-294-921. Concrete Flared End Sections & Inlet Structures shall be required.

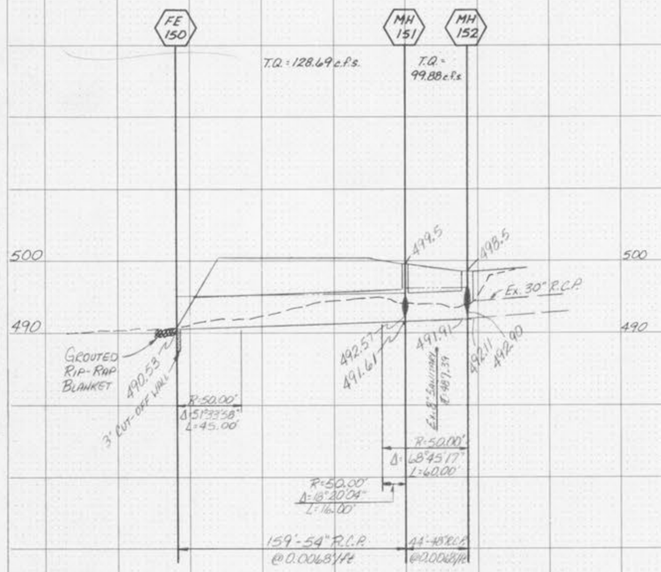

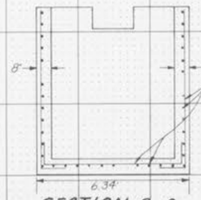

SECTION A-A

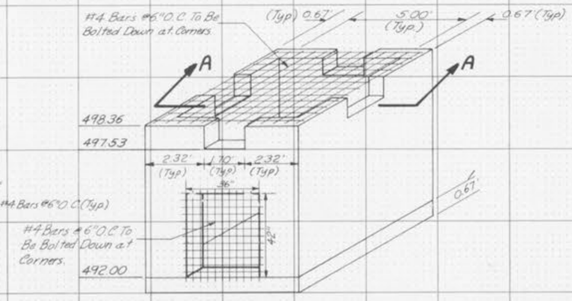

OVERFLOW STRUCTURE 124

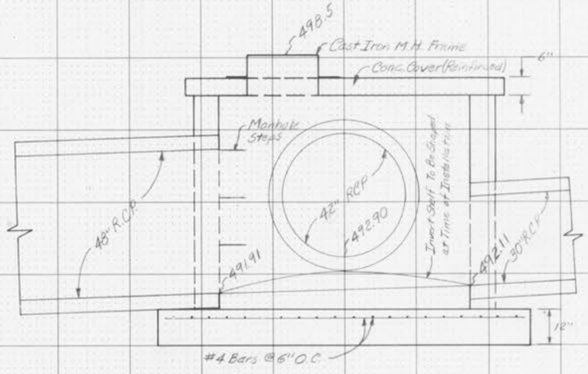

MANHOLE 152

HIGHWAY FEDERAL AID SHEET
PLATE 3-FULL CROSS SECTION-LINE & DOT
NATIONAL PRINTFAST
PRINTED IN U.S.A.