CONSTRUCTION DETAILS

ROUND PIPE				HORIZONTAL ELLIPTICAL PIPE			
INSIDE DIAMETER OF PIPE (INCHES)	"W" PAYLINE WIDTH OF TRENCH (INCHES)	"W" PAYLINE WIDTH OF TRENCH (FEET)	PAY-VOLUMES CU. FT. PER FT. CONCRETE ENCASEMENT	INSIDE DIAMETER OF PIPE (INCHES)	"W" PAYLINE WIDTH OF TRENCH (INCHES)	"W" PAYLINE WIDTH OF TRENCH (FEET)	PAY-VOLUMES CU. FT. PER FT. CONCRETE ENCASEMENT
4	30	2.50	3.28				
6	30	2.50	3.59				
8	30	2.50	3.87				
10	30	2.50	4.09				
12	30	2.50	4.25				
15	36	3.00	5.55				
18	36	3.00	5.77	14 x 23	41	3.42	5.84
21	39	3.25	6.61				
24	42	3.50	7.39	19 x30	49	4.08	7.66
27	45	3.75	8.18	22 x 34	53	4.42	8.61
30	49	4.08	9.30	24 x 38	58	4.83	9.70
33	53	4.42	10.53	27 x 42	62	5.17	10.71
36	56	4.67	11.43	29 x 45	66	5.50	11.72
39	DISCONTINUED			32 x 49	71	5.92	13.14
42	63	5.25	13.36	34 x 53	75	6.25	14.05
48	70	5.83	15.67	38 x 60	83	6.92	16.16
54	77	6.42	18.15	43 x 68	92	7.67	18.81
60	84	7.00	20.73	48 x 76	101	8.42	21.59
66	91	7.58	23.45	53 x 83	109	9.08	24.35
72	98	8.17	26.37	58 x 91	118	9.83	27.46
78	105	8.75	29.39	63 x 98	126	10.50	30.50
84	112	9.33	32.57	68 x 106	135	11.25	33.91
90	119	9.92	35.90	72 x 113	143	11.92	36.99
96	126	10.50	39.37	77 x 121	152	12.67	40.88
102	133	11.08	42.99	82 x 128	160	13.33	44.46
108	140	11.67	46.75	87 x 136	168	14.00	47.79
114	147	12.25	50.66	92 x 143	176	14.67	51.70
120	154	12.83	54.72	97 x 151	185	15.42	56.01
126	161	13.42	58.92				
132	168	14.00	63.27	106 x 168	202	16.83	64.46
144	182	15.17	72.40	116 x 180	218	18.17	73.58

Duckett Creek Sanitary District
PAYLINE WIDTHS OF TRENCH AND PAY-QUANTITIES OF CONCRETE — BSM — KLA — MDOB — 12-21-99 — 1

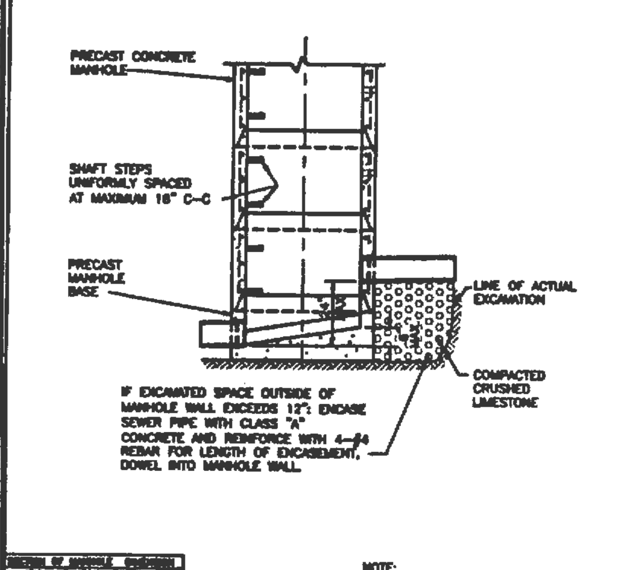

NOTE:
ALL INVERTS SHALL HAVE POSITIVE DRAINAGE THROUGH MANHOLE.

SEE A.S.T.M. C-478 FOR MINIMUM STEEL REQUIREMENTS.

Duckett Creek Sanitary District
INSIDE FOULWATER DROP MANHOLE (SWEEP INVERT) — BSM — KLA — MDOB — 01-04-00 — 9

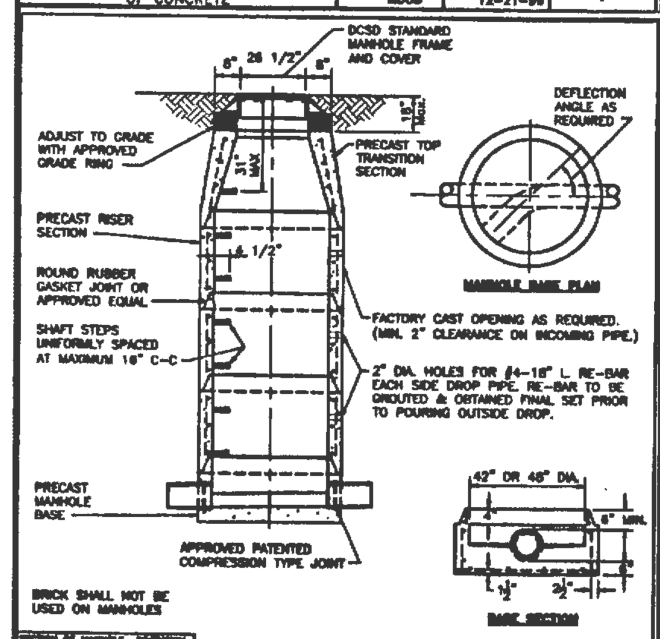

NOTE:
ALL INVERTS SHALL HAVE POSITIVE DRAINAGE THROUGH MANHOLE.

SEE A.S.T.M. C-478 FOR MINIMUM STEEL REQUIREMENTS.

Duckett Creek Sanitary District
PRE-CAST CONCRETE MANHOLE FOR SEWERS 8" THROUGH 18" — BSM — KLA — MDOB — 12-30-99 — 7

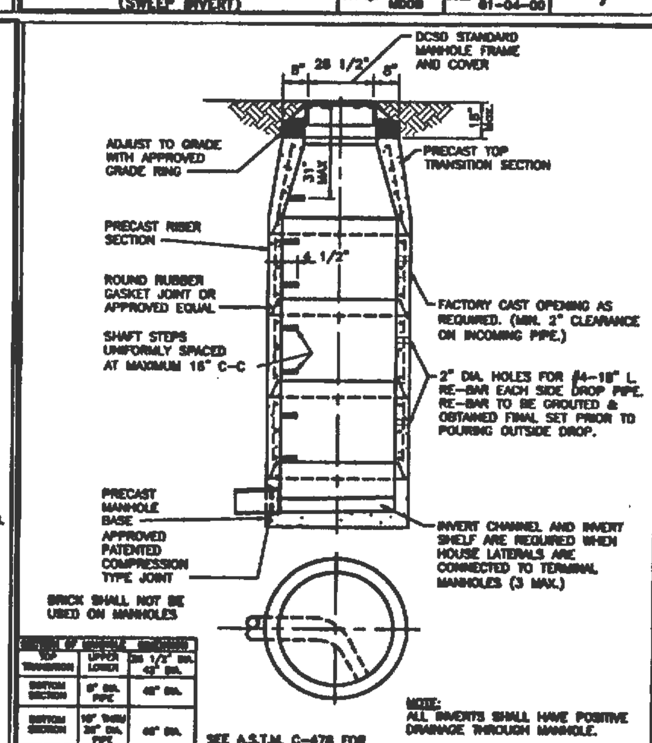

NOTE:
ALL INVERTS SHALL HAVE POSITIVE DRAINAGE THROUGH MANHOLE.

SEE A.S.T.M. C-478 FOR MINIMUM STEEL REQUIREMENTS.

Duckett Creek Sanitary District
TERMINAL MANHOLE FOR SEWERS 8" THROUGH 18" — BSM — KLA — MDOB — 01-03-00 — 8

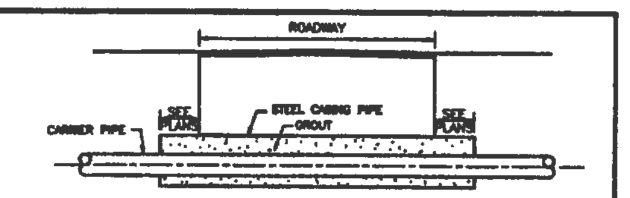

BORING DETAIL

NOTES:

1. INSIDE DIAMETER OF CASING PIPE TO BE MINIMUM OF 4" GREATER THAN COUPLING DIAMETER OF CARRIER PIPE.
2. ENCASEMENTS TO BE INSTALLED UNDER THE ROAD BY MEANS OF JACKING IT THROUGH, OR BY DRY BORING A HOLE THAT WILL RECEIVE THE CASING WITH A SNUG FIT.
3. THE OUTSIDE DIAMETER OF THE CASING SHALL NOT BE LESS THAN, NOR MORE THAN ONE INCH GREATER THAN THE BORED HOLE.
4. THE ANNULAR SPACE BETWEEN THE CASING PIPE AND THE BORED HOLE SHALL BE FILLED WITH GROUT.

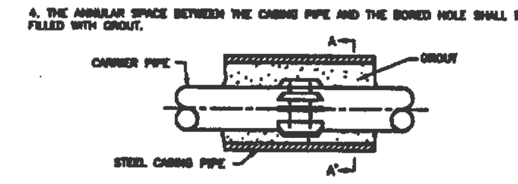

SUPPORT OF CARRIER PIPE OR FORCE MAIN IN CASING

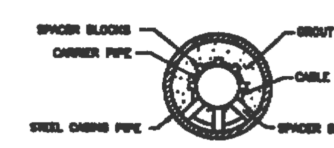

SECTION A-A'

Duckett Creek Sanitary District
ROADWAY BORING DETAIL — BSM — KLA — MDOB — 1-5-01 — 23

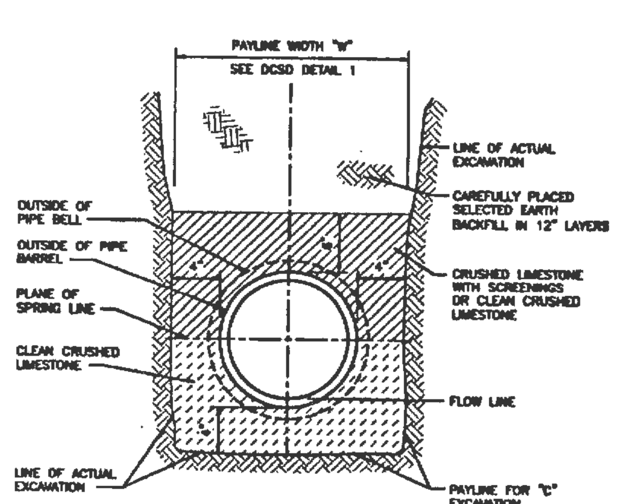

Duckett Creek Sanitary District
PIPE BEDDING CLASS "C" (FOR ALL PIPE EXCEPT REINFORCED CONCRETE PIPE) — BSM — KLA — MDOB — 12-21-99 — 3

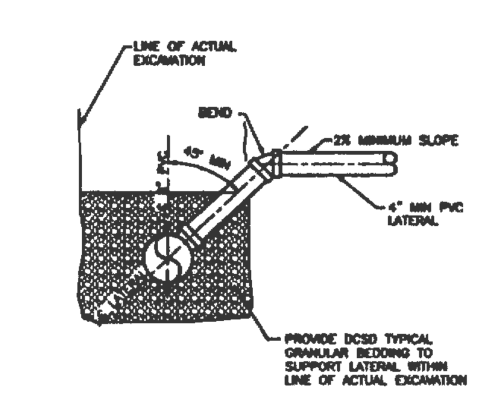

Duckett Creek Sanitary District
SANITARY SEWER LATERAL RISER DETAIL — BSM — KLA — MDOB — 1-9-01 — 27

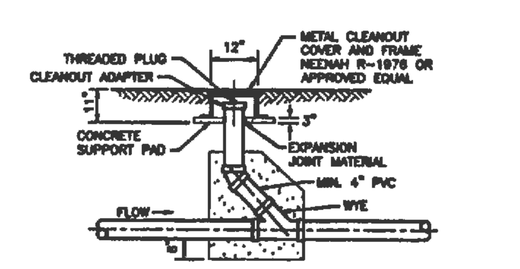

METAL FRAME AND COVER TYPE CLEANOUT

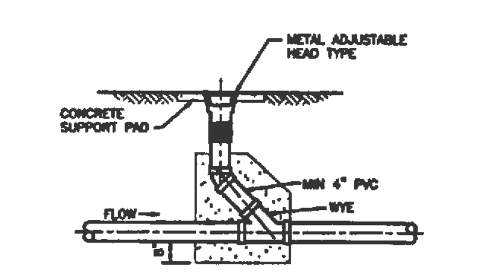

ADJUSTABLE HEAD TYPE CLEANOUT

Duckett Creek Sanitary District
TYPICAL SEWER LATERAL CLEANOUT DETAILS — BSM — KLA — MDOB — 1-8-01 — 25

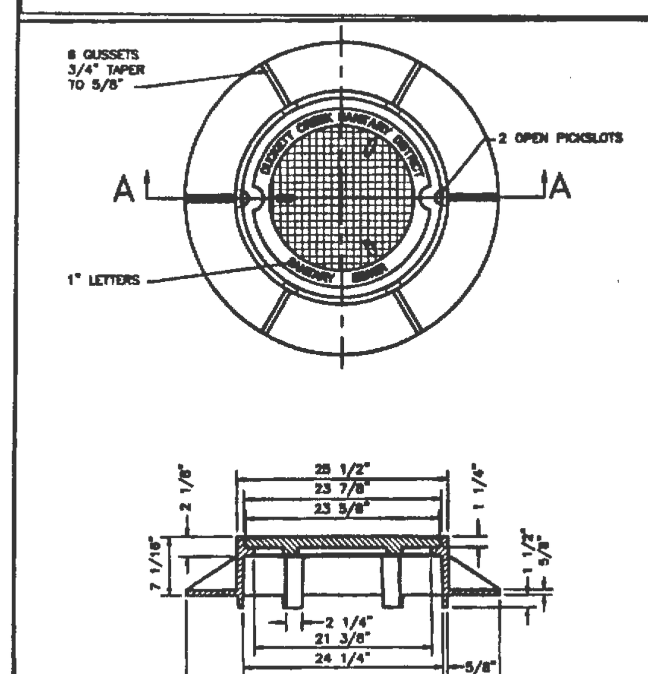

SECTION A-A

Duckett Creek Sanitary District
MANHOLE FRAME AND COVER — BSM — KLA — MDOB — 01-14-00 — 12

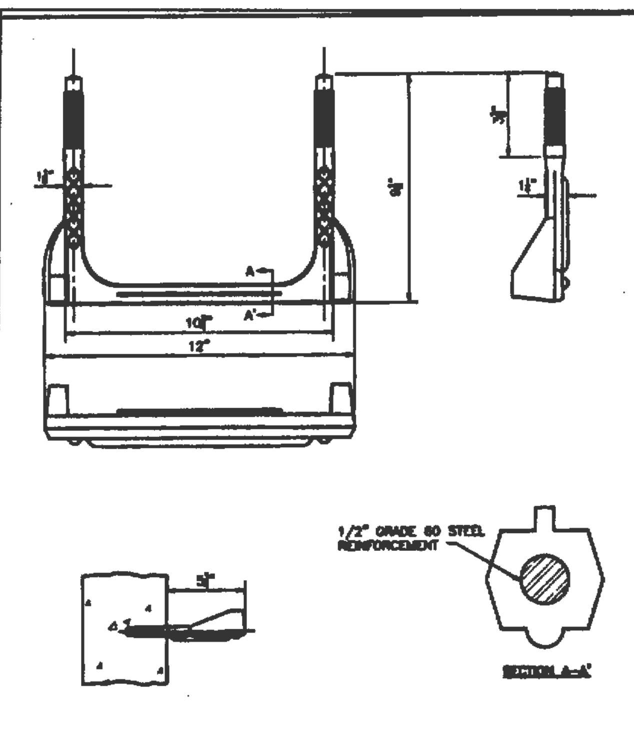

Duckett Creek Sanitary District
MANHOLE STEP PRECAST MANHOLE — BSM — KLA — MDOB — 1-3-01 — 18

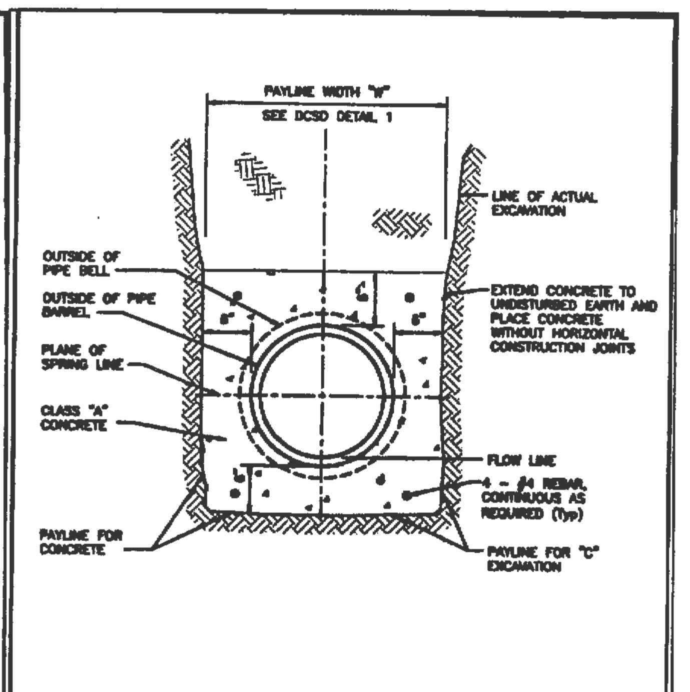

NOTE:
SUPPORT PIPE TO PREVENT DISPLACEMENT DURING PLACEMENT OF CONCRETE.

Duckett Creek Sanitary District
TYPICAL CONCRETE ENCASEMENT — BSM — KLA — MDOB — 12-21-99 — 4

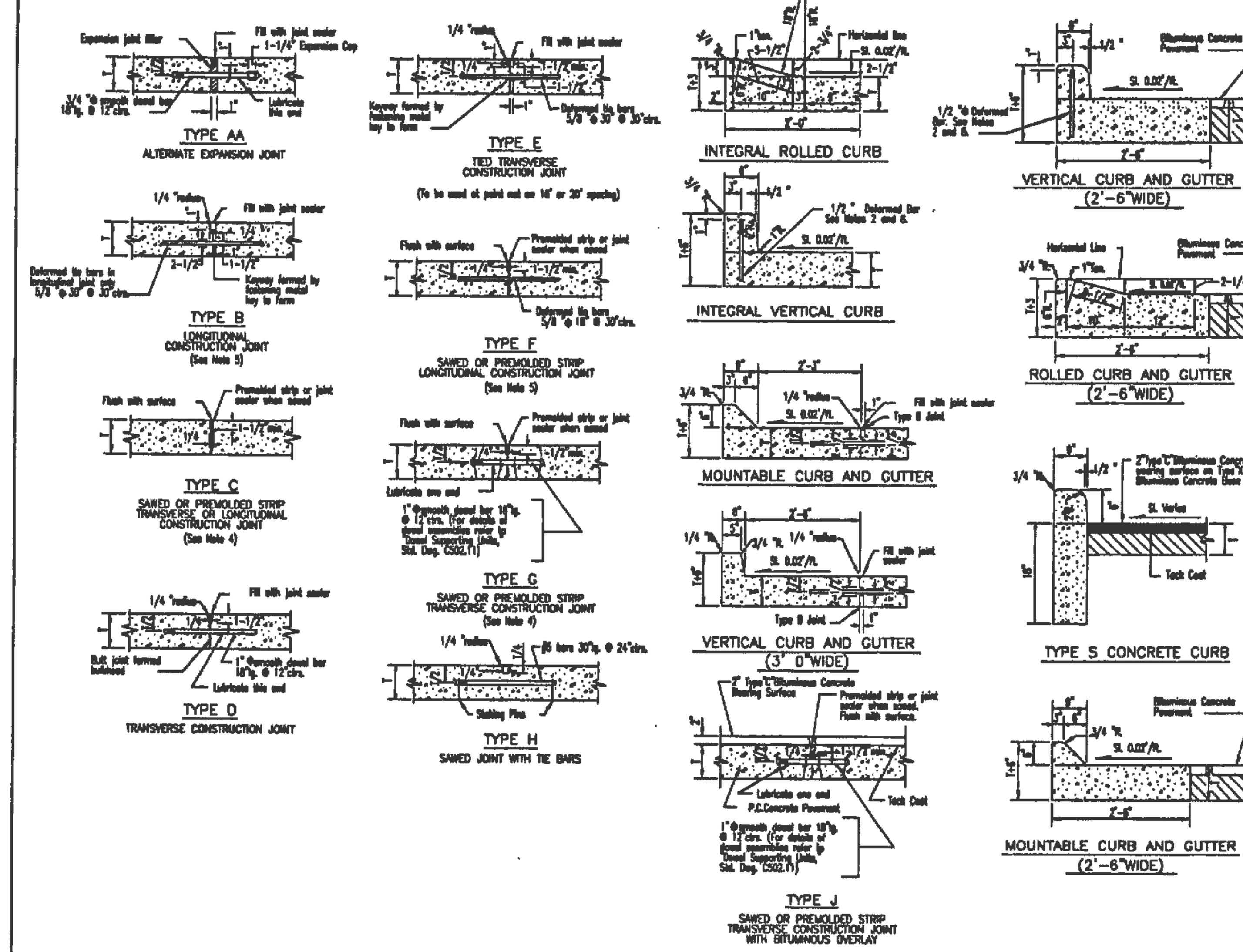

GENERAL NOTES

1. Do not scale drawing. Follow dimensions.
2. Construction joint and tie bars may be omitted when curb is poured integral with pavement.
3. Minimum Thickness for Pavement in Bituminous Concrete Pavement Thickness = (T)

Concrete Pavement Thickness =	(T)	
All Residential Minor and Local Streets	6"	7-1/2"
Residential Collector and Non-Residential Streets	7"	9-1/2"
All Arterial Streets	8"	12"

4. Type "C" Transverse Joint is required for Arterial and Non-Residential streets. Use Type "C" Transverse Joint for all others.
5. For Subdivision or Minor Streets having 6" concrete pavement, 1/2" Ø deformed tie bars, 30" long at 30" centers shall be used for type "B" Longitudinal Joints and 1/2" Ø deformed tie bars 18" long at 30" centers shall be used for Type "F" Longitudinal Joints.
6. Refer to Pavement Construction Details for "Integral Vertical Curb and Concrete Pavement Typical Sections and Details," Std. Dwg. C502.01 and "Integral Rolled Curb and Concrete Pavement Typical Sections and Details," Std. Dwg. C502.02 for joint and bar requirements for different street classifications. Note that width and location of each poured portion of the pavement may change the type and location of joint required.
7. All deformed bars for joints and curbs shall be Billet Steel Bars conforming to A.S.T.M. A615-75, Grade 40.
8. Length of the tie bars shall equal the thickness of pavement plus the height of curb less 3". Tie bars shall be placed at 24" centers.
9. Transverse or longitudinal construction joints in slip formed pavements may be made with a groover or tool, if such device has been approved in advance by the Department.
10. The free end of the dowel bar for a length of at least 11 inches shall be coated with an approved graphite grease.
11. All dowel bars 18"lg. @ 12"ctrs. shall be epoxy coated.

SAINT CHARLES COUNTY
HIGHWAY DEPARTMENT
ST. CHARLES, MISSOURI
PAVEMENT CONSTRUCTION DETAILS
JOINTS AND CURBS
DATE: September, 2002 — DRAWING C502.03

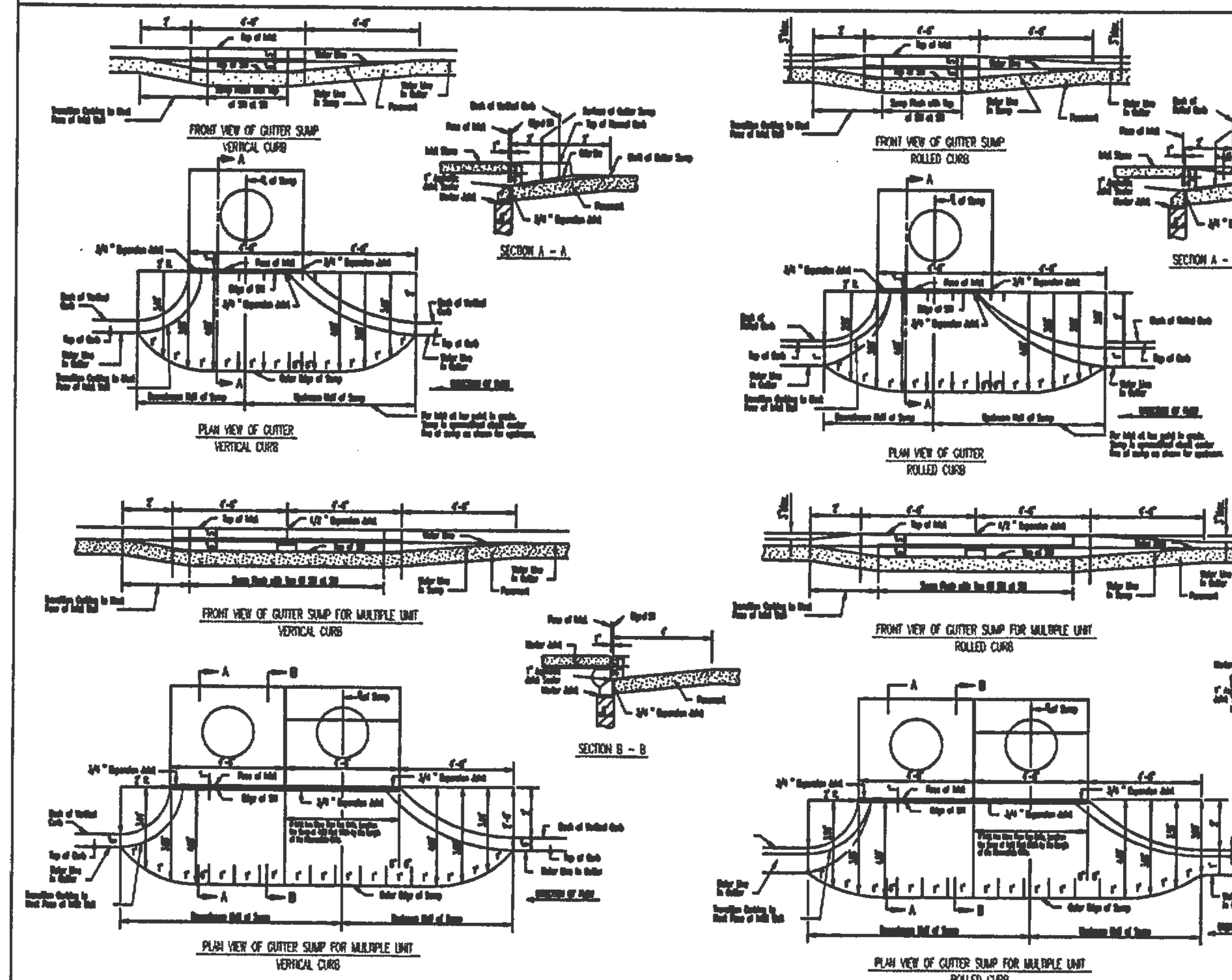

1. Do not scale drawing. Follow dimensions.
2. The details shown are adopted from Revised Standard Construction Details for Sewers and Drainage Facilities dated 1992.
3. The standard specification sections noted refer to the Standard Construction Specifications for Sewers and Drainage Facilities of The Metropolitan St. Louis Sewer District dated 1992.
4. Inlets may be located 2.5 feet from the back of rolled curb. Add 0.5 feet to all sump dimensions for all inlets that are 2.5 feet offset.
5. For curbed inlets, the sump shall extend 2.0 feet from the projection of the back of the curb.

SAINT CHARLES COUNTY
HIGHWAY DEPARTMENT
ST. CHARLES, MISSOURI
SEWER CONSTRUCTION DETAILS
STREET INLET SUMPS
DATE: June, 2002 — DRAWING C604.38

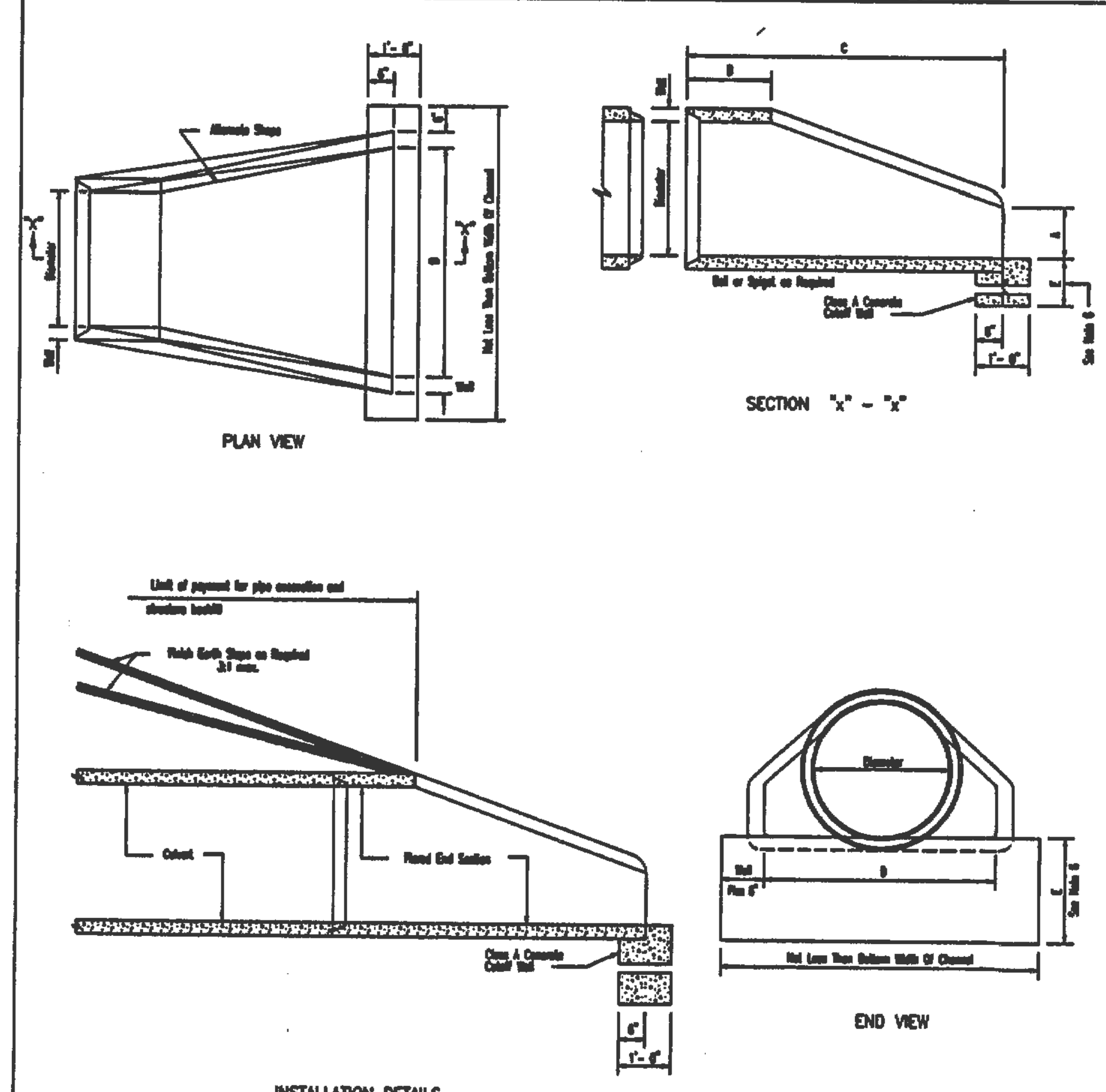

DIMENSIONS						
Dia.	Wall	A	B(min.)	C(min.)	D	E
12"	2"	4"	4'-0"	6"	2'-0"	See Note 6
15"	2-1/4"	6"	3'-10"	6"	2'-6"	
18"	2-1/2"	9"	3'-10"	6"	3'-0"	
21"	2-3/4"	9"	3'-2"	6"	3'-6"	
24"	3"	9-1/2"	2'-6"	6"	4'-0"	
27"	3-1/4"	10-1/2"	2'-1"	6"	4'-6"	
30"	3-1/2"	1'-0"	1'-7"	6"	5'-0"	
36"	4"	1'-3"	2'-10"	6"	6'-0"	
42"	4-1/2"	1'-9"	2'-11"	6"	6'-6"	
48"	5"	2'-0"	2'-2"	6"	7'-0"	
54"	5-1/2"	2'-3"	2'-11"	6"	7'-6"	
60"	6"	2'-6"	3'-3"	6"	8'-0"	
66"	6-1/2"	2'-9"	1'-9"	6"	8'-6"	

REINFORCEMENT					
[illegible]	BARREL SECTION REINFORCEMENT — CIRCULAR [illegible] SQ. IN./LIN. FT.	BARREL SECTION REINFORCEMENT — CIRCULAR [illegible] SQ. IN./LIN. FT.	BARREL SECTION REINFORCEMENT — ELLIPTICAL	FLARE SECTION REINFORCEMENT (ONE LAYER ONLY IN CTR. OF WALL) [illegible]	FLARE SECTION REINFORCEMENT (ONE LAYER ONLY IN CTR. OF WALL) [illegible]
12"	0.07	—	—	0.048	0.048
15"	0.07	—	—	0.054	0.054
18"	0.07	—	0.07	0.060	0.060
21"	0.07	—	0.07	0.066	0.066
24"	0.07	—	0.07	0.072	0.072
27"	0.13	—	0.11	0.078	0.078
30"	0.14	—	0.12	0.084	0.084
36"	0.12	0.09	0.13	0.096	0.096
42"	0.15	0.12	0.17	0.108	0.108
48"	0.18	0.14	0.20	0.120	0.120
54"	0.22	0.16	0.24	0.132	0.132
60"	0.25	0.19	0.28	0.144	0.144
66"	0.31	0.23	0.34	0.156	0.156

GENERAL NOTES

1. Do not scale drawing. Follow dimensions.
2. Slight variations in both shape and dimensions from those shown may be accepted if approved by the Engineer.
3. Not more than three lift holes may be drilled or cast in the End Section for handling and laying.
4. Lift lugs or bars will be permitted in precast Cutoff Walls.
5. Cutoff Wall may be cast-in-place or precast.
6. Cutoff Wall is to be constructed a minimum of 2' at inlet end and 3' at outlet end or to rock.
7. For construction details refer to the Sewer Construction Details for "Chimneys, Collars and Large Sewer Connections," Std. Dwg. C604.41.
8. The details shown are adapted from the Missouri Department of Transportation, Standard Drawings.

SAINT CHARLES COUNTY
HIGHWAY DEPARTMENT
ST. CHARLES, MISSOURI
SEWER CONSTRUCTION DETAILS
FLARED END SECTION
(PRECAST CONCRETE)
DATE: June, 2002 — DRAWING C604.40

CD 3