CONSTRUCTION DETAILS

Rev 4/99

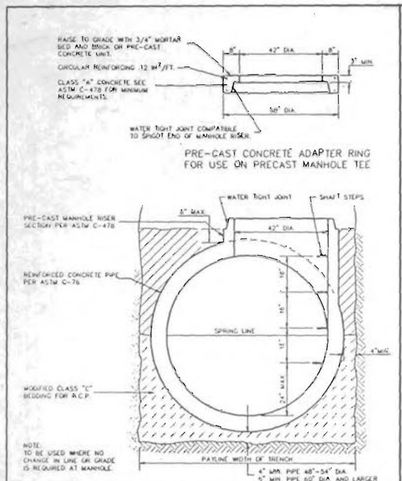

TYPICAL PRE-CAST MH. TEE FOR REINFORCED CONCRETE PIPE SEWERS 48" AND LARGER IN DIAMETER — METROPOLITAN ST. LOUIS SEWER DISTRICT, Standard Details of Sewer Construction — Dr. W.S.H. Ch. J.C.K. — 1992 — SHEET 19

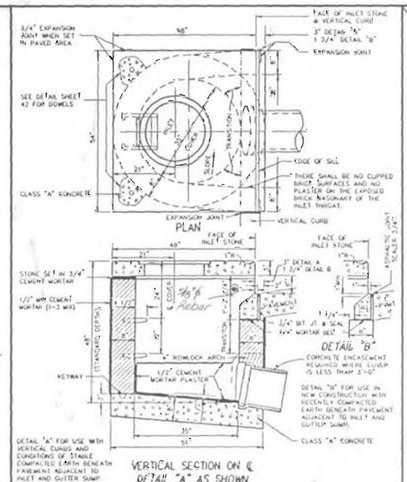

UNTRAPPED STREET INLET BRICK CONSTRUCTION — METROPOLITAN ST. LOUIS SEWER DISTRICT, Standard Details of Sewer Construction — Dr. W.S.H. Ch. J.C.K. — 1992 — SHEET 20

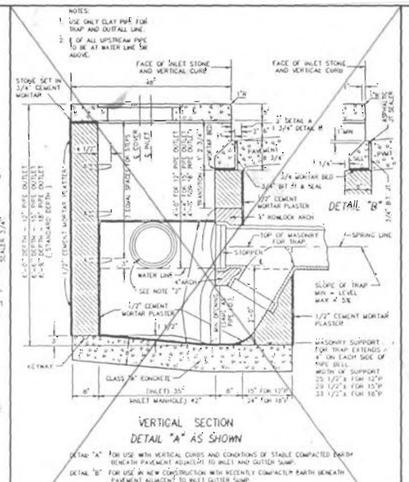

TRAPPED STREET INLET BRICK CONSTRUCTION — METROPOLITAN ST. LOUIS SEWER DISTRICT, Standard Details of Sewer Construction — Dr. W.S.H. Ch. J.C.K. — 1992 — SHEET 21

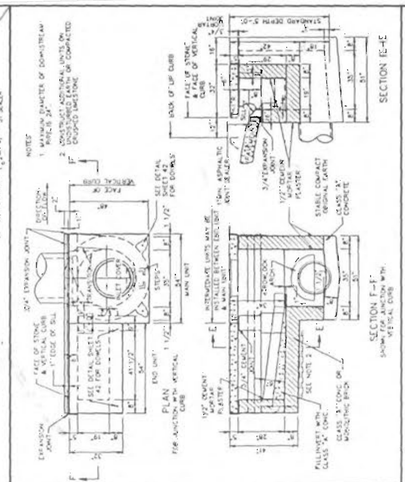

MULTIPLE STREET INLET BRICK CONSTRUCTION — METROPOLITAN ST. LOUIS SEWER DISTRICT, Standard Details of Sewer Construction — Dr. D.A.B. Ch. J.C.K. — 1992 — SHEET 22

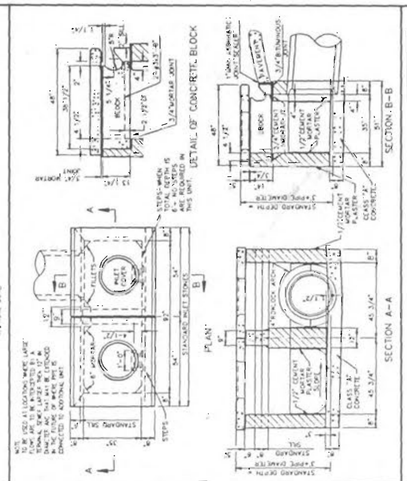

DOUBLE UNTRAPPED STREET INLET BRICK CONSTRUCTION — METROPOLITAN ST. LOUIS SEWER DISTRICT, Standard Details of Sewer Construction — Dr. D.A.B. Ch. J.C.K. — 1992 — SHEET 23

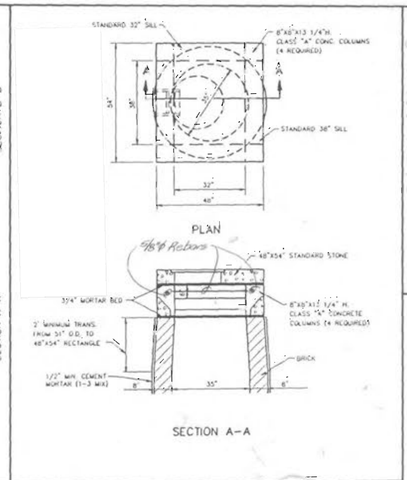

AREA INLET OPEN 4 SIDES BRICK CONSTRUCTION — METROPOLITAN ST. LOUIS SEWER DISTRICT, Standard Details of Sewer Construction — Dr. R.G.W. Ch. J.C.K. — 1992 — SHEET 24

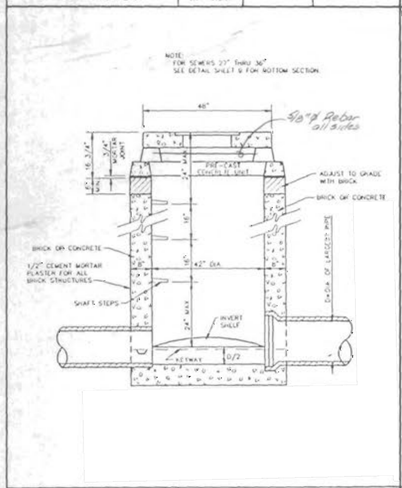

AREA INLET MANHOLE (12" THRU 24") — METROPOLITAN ST. LOUIS SEWER DISTRICT, Standard Details of Sewer Construction — Dr. R.G.W. Ch. J.C.K. — 1992 — SHEET 25

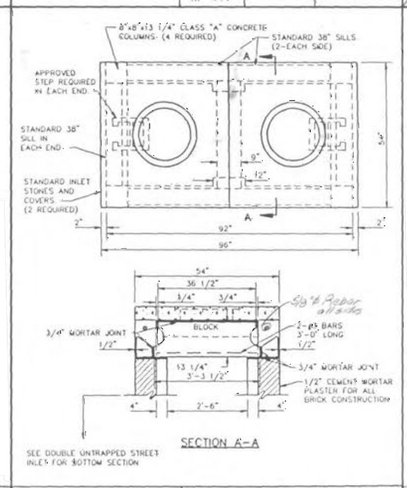

DOUBLE AREA INLET OPEN 4 SIDES BRICK CONSTRUCTION — METROPOLITAN ST. LOUIS SEWER DISTRICT, Standard Details of Sewer Construction — Dr. R.G.W. Ch. J.C.K. — 1992 — SHEET 26

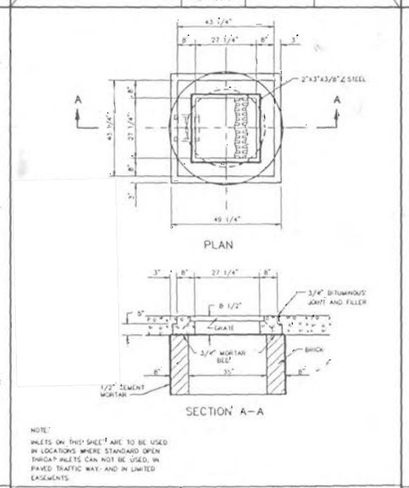

2 GRATE INLET BRICK CONSTRUCTION — METROPOLITAN ST. LOUIS SEWER DISTRICT, Standard Details of Sewer Construction — Dr. R.G.W. Ch. J.C.K. — 1992 — SHEET 27

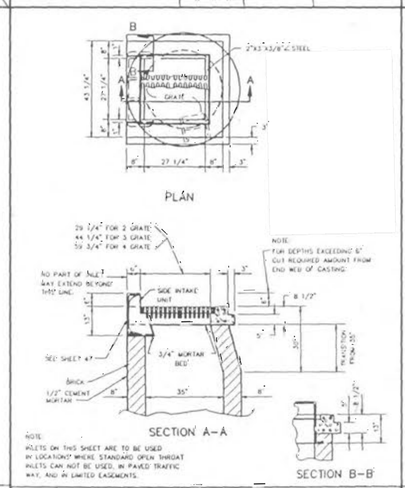

2 GRATE INLET WITH SIDE INTAKE BRICK CONSTRUCTION — METROPOLITAN ST. LOUIS SEWER DISTRICT, Standard Details of Sewer Construction — Dr. R.G.W. Ch. J.C.K. — 1992 — SHEET 28

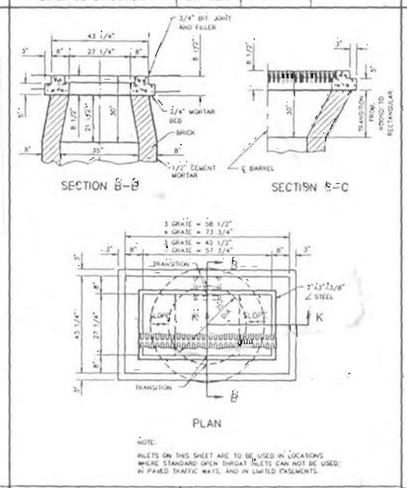

3 & 4 GRATE INLET BRICK CONSTRUCTION — METROPOLITAN ST. LOUIS SEWER DISTRICT, Standard Details of Sewer Construction — Dr. R.G.W. Ch. J.C.K. — 1992 — SHEET 29

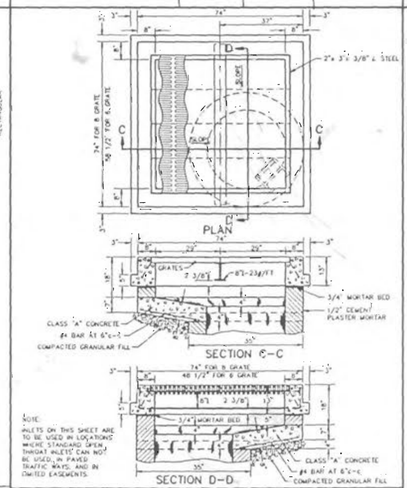

6 & 8 GRATE INLET BRICK CONSTRUCTION — METROPOLITAN ST. LOUIS SEWER DISTRICT, Standard Details of Sewer Construction — Dr. W.S.H. Ch. J.C.K. — 1992 — SHEET 30

PRECAST CONCRETE STORMWATER STRUCTURES

MINIMUM DISTANCE FLOWLINE TO TOP OF STONE OR GRATE:

PIPE ID NOMINAL INCHES	AREA INLET CIRCULAR BASE DIA. 42"	48"	60"	2 GRATE INLET CIRCULAR BASE DIA. 42"	48"	60"	SQUARE (MAX.)	SINGLE STREET INLET CIRCULAR BASE DIA. 42"	48"	60"	RECTANGLE (MAX.)
10"	43"			38"			31"	48"			41"
15"	48"			41"			34"	51"			44"
18"	52"			44"			37"	55"			48"
21"	55"			47"			40"	58"			51"
24"		58"			51"		44"		61"		54"
27"			78"			71"	NA			81"	NA
30"			82"			74"	NA			85"	NA
33"			89"			77"	NA			88"	NA
	(SEE SHEET 32 FOR DETAIL)			(SEE SHEET 33 FOR DETAIL)			(SEE SHEET 34 FOR DETAIL)				

NOTE: 1. 48" DIA. BASE REQUIRES 7" HIGH TRANSITION SECTION TO 42" DIA. SIMILAR TO "ADAPTER RING" SHEET 32.
2. 60" DIA. BASE REQUIRES 24" HIGH CONCENTRIC REDUCER TRANSITION TO 42" DIA. SIMILAR TO "ADAPTER RING" SHEET 32.

PRECAST CONCRETE STORMWATER STRUCTURES — METROPOLITAN ST. LOUIS SEWER DISTRICT, Standard Details of Sewer Construction — Dr. J.L.G. Ch. J.C.K. — SEPT. 1990 — SHEET 31

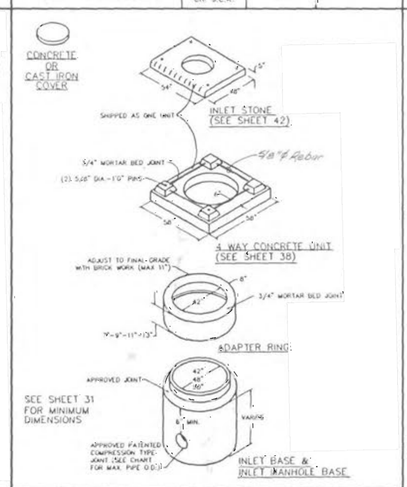

AREA INLET PRECAST CONCRETE — METROPOLITAN ST. LOUIS SEWER DISTRICT, Standard Details of Sewer Construction — Dr. J.L.G. Ch. J.C.K. — APRIL 1992 — SHEET 32

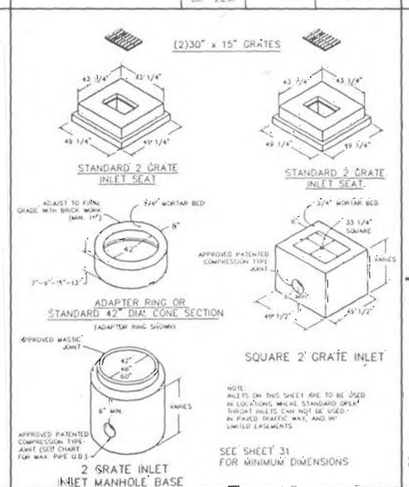

2 GRATE INLETS PRECAST CONCRETE — METROPOLITAN ST. LOUIS SEWER DISTRICT, Standard Details of Sewer Construction — Dr. J.L.G. Ch. J.C.K. — APRIL 1992 — SHEET 33

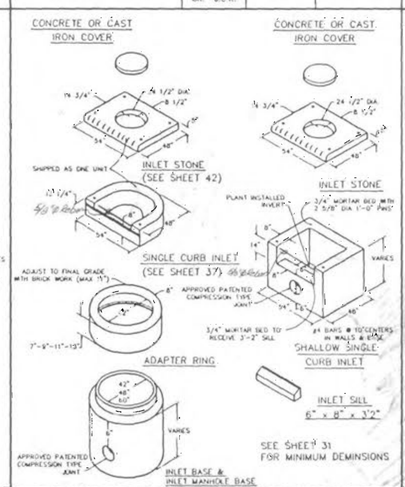

SINGLE STREET INLETS PRECAST CONCRETE — METROPOLITAN ST. LOUIS SEWER DISTRICT, Standard Details of Sewer Construction — Dr. J.L.G. Ch. J.C.K. — APRIL 1991 — SHEET 34

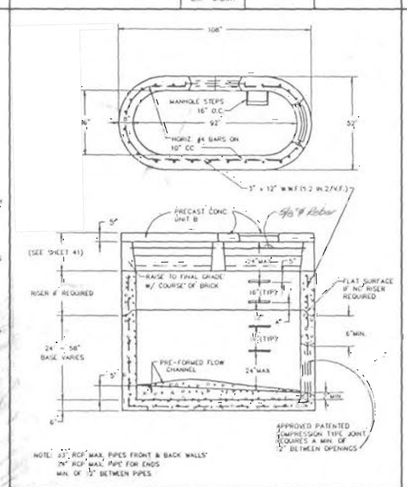

DOUBLE UNTRAPPED STREET INLET PRECAST CONCRETE — METROPOLITAN ST. LOUIS SEWER DISTRICT, Standard Details of Sewer Construction — Dr. J.L.G. Ch. J.C.K. — SEPT. 1992 — SHEET 35

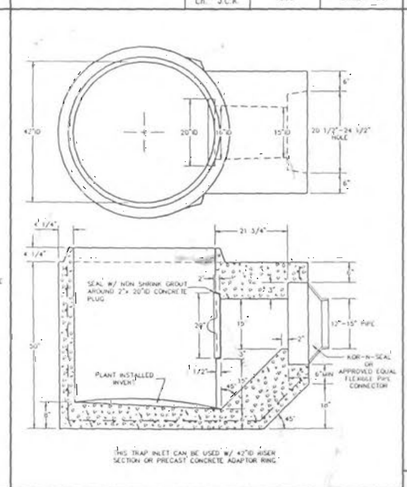

TRAPPED STREET INLET BASE PRECAST CONCRETE — METROPOLITAN ST. LOUIS SEWER DISTRICT, Standard Details of Sewer Construction — Dr. W.S.H. Ch. J.C.K. — 1992 — SHEET 36