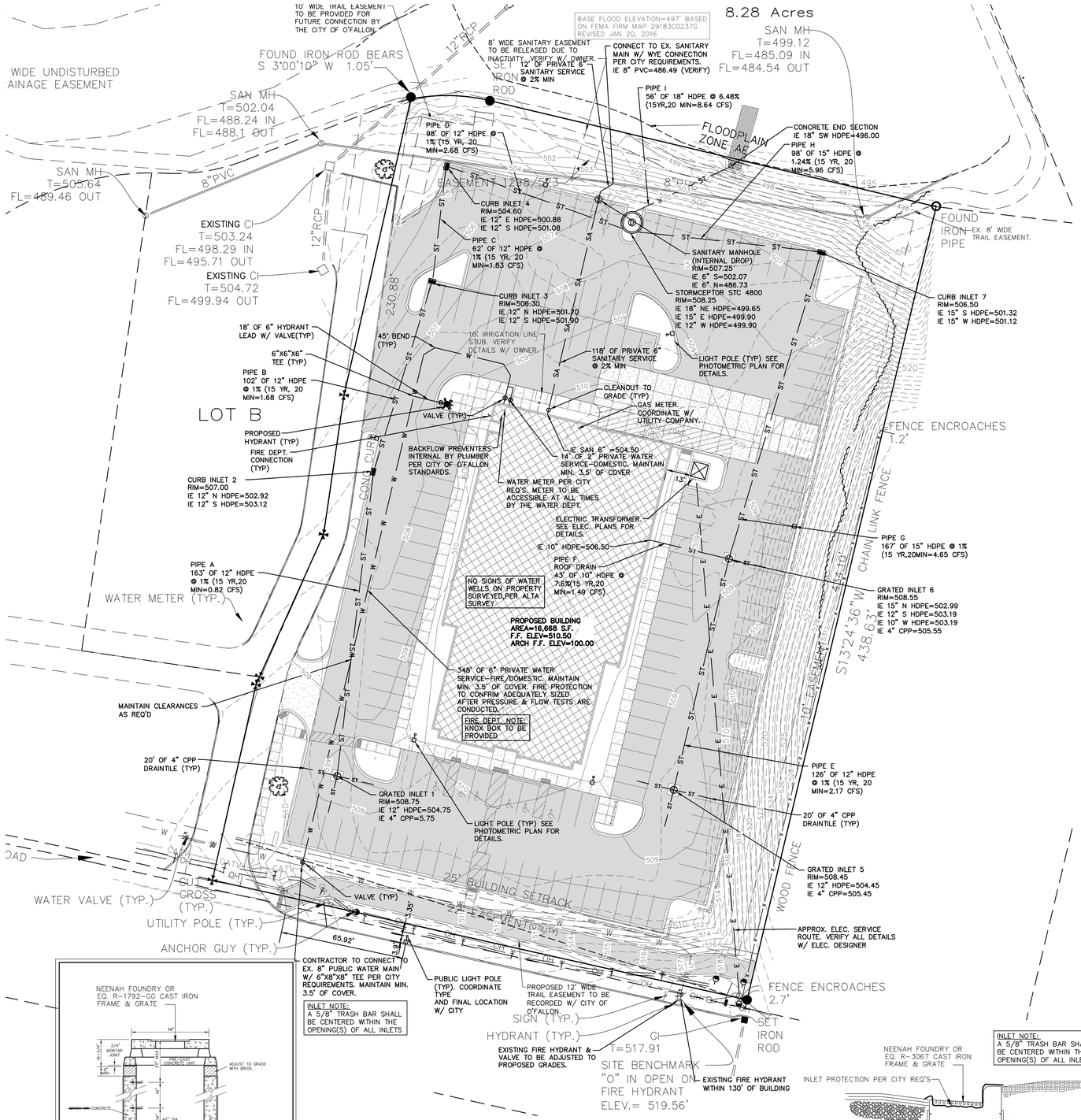

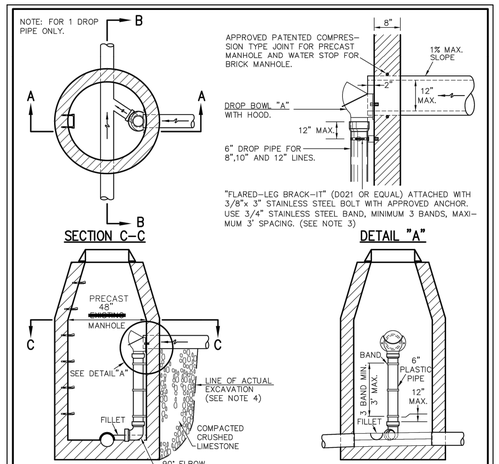

NOTES:

1) NEW INSIDE DROP ON EXISTING MANHOLE REQUIRES THAT THE FLOWLINE OF THE NEW DROP PIPE ELBOW BE CONSTRUCTED AT THE SAME ELEVATION AS THE SPRINGLINE OF THE EXISTING SEWER MAIN AT THE CENTER OF THE EXISTING MANHOLE.
2) THE MINIMUM INSIDE DIAMETER FOR THE BASE AND RISER SECTIONS SHALL BE 48 INCHES.
3) INSTALL DROP BOWL "A" (MFR. RELINER-DURAN INC. OR EQUAL). ATTACH BOWL DIRECTLY UNDER INCOMING PIPE WITH 1" CLEARANCE USING TWO (2) 3/8"x 3" STAINLESS STEEL BOLTS WITH APPROVED ANCHORS & MASTIC.
4) IF EXCAVATED SPACE OUTSIDE OF MANHOLE WALL EXCEEDS ONE FOOT, PROVIDE SIX INCHES OF CLASS "A" CONCRETE ENCASEMENT ON INCOMING LINE FROM WALL OF MANHOLE TO A MINIMUM OF TWO FEET INTO UNDISTURBED EARTH WITH A MINIMUM OF 4-#4 REBARS FOR LENGTH OF ENCASEMENT OR INSTALL ONE (1) LENGTH OF D.I.P. FROM MANHOLE INTO UNDISTURBED EARTH.

NEW INSIDE DROP ON ~~EXISTING~~ MANHOLE	METROPOLITAN ST. LOUIS SEWER DISTRICT *Standard Details of Sewer Construction*		
	Dr. RGW/SAM Ch. J.C.K.	2009	SHEET 18

Rinker MATERIALS™

Stormceptor -Serving the Midwest

DanielC.Thomson@Cemex.com

STC 4800 Precast Concrete Stormceptor®
(4800 U.S. Gallon Capacity)
Multi-inlet Style

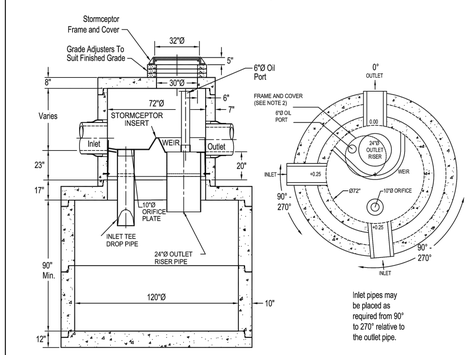

Heaviest single pick
Wt = 21,100# appx.

Notes:

1. The Use Of Flexible Connection is Recommended at The Inlet and Outlet Where Applicable.
2. The Cover Should be Positioned Over The Outlet Drop Pipe and The Oil Port.
3. The Stormceptor System is protected by one or more of the following U.S. Patents: #4985148, #5498331, #5725760, #5753115, #5849181, #6068765, #6371690.
4. Contact a Concrete Pipe Division representative for further details not listed on this drawing.

Rinker 033 MWMulti

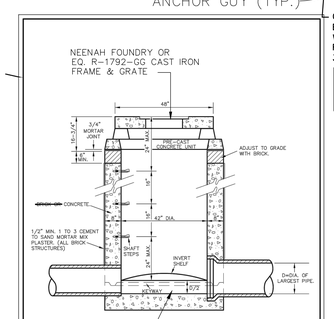

NOTE:
FOR SEWERS 27 INCH THRU 42 INCH SEE DETAIL SHEET 11 FOR BOTTOM SECTION.

GRATED AREA INLET MANHOLE (12" THRU 24")	METROPOLITAN ST. LOUIS SEWER DISTRICT *Standard Details of Sewer Construction*		
	Dr. RGW/SAM Ch. J.C.K.	2009	SHEET 29

INLET NOTE:
A 5/8" TRASH BAR SHALL BE CENTERED WITHIN THE OPENING(S) OF ALL INLETS

ROCK BACKFILL NOTE:
ROCK BACKFILL IS REQUIRED TO ALL STORM AND SANITARY SEWERS WITHIN 10' OF THE EDGE OF PAVEMENT AND THAT LIE WITHIN THE 1:1 SHEAR PLANE OF THE ROAD.

PROVIDE A MARKING ON THE STORM SEWER INLETS. THE CITY WILL ALLOW THE FOLLOWING MARKERS AND ADHESIVE PROCEDURES ONLY AS SHOWN IN THE TABLE BELOW OR AN APPROVED EQUAL.

Manufacturer	Size	Adhesive	Style	Message (Part #)	Website
ACP International	3 7/8"	Epoxy	Crystal Cap	No Dumping Drains To Waterways (SD-W-CC)	www.acpinternational.com
DAS Manufacturing, Inc.	4"	Epoxy	Standard Style	No Dumping Drains To Stream (#SDS)	www.dasmanufacturing.com

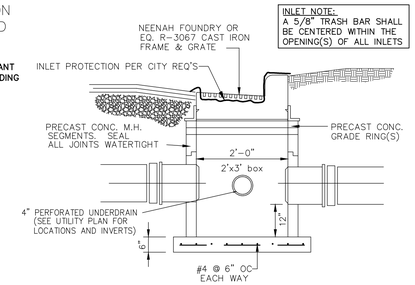

CURB INLET
NO SCALE

P+Z No. 16-000086
Approval Date: Jan 7, 2016
City No.: CSP-16-0000001

NORTH

UTILITY PLAN

1"= 30' SCALE — 30' 0 30' 60' FEET

PRELIMINARY DRAWING - NOT FOR CONSTRUCTION

EXCEL ENGINEERING inc.
100 CAMELOT DRIVE
FOND DU LAC, WI 54935
PHONE: (920) 926-9800
FAX: (920) 926-9801

Always a Better Plan

OWNER:
W.D.S. CONSTRUCTION, INC.
111 ROWELL STREET
BEAVER DAM, WI 53916

PROJECT:
BIOLIFE PLASMA CENTER
BRAMBLET CROSSING (LOT A)
O'FALLON, MO 63368

PRELIMINARY SHEET DATES:

DECEMBER 4, 2015
DECEMBER 23, 2015
JANUARY 29, 2016
FEBRUARY 16, 2016
MARCH 1, 2016

JOB NUMBER: 1514400

SHEET

C1.4

2015 © EXCEL ENGINEERING, INC.