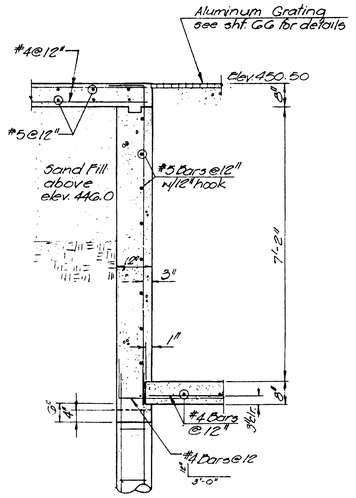

SECTION 1/25
Scale: 1/2" = 1'-0"
(Re. sht. 23)

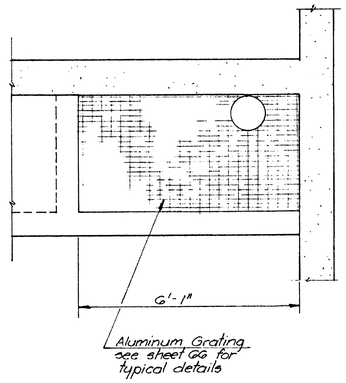

DETAIL 2/25
Scale: 1/2" = 1'-0"
(Re. sht. 23)

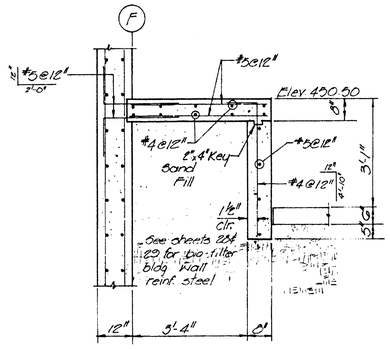

SECTION 3/25
Scale: 1/2" = 1'-0"
(Re. sht. 23)

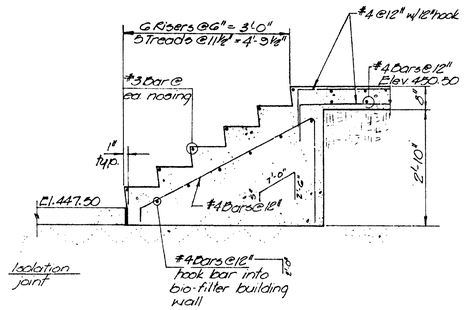

SECTION 4/26
Scale: 1/2" = 1'-0"
(Re. sht. 23)

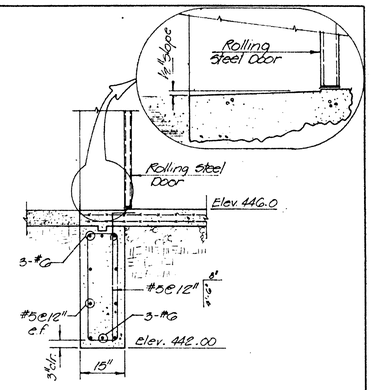

SECTION 5/26
Scale: 1/2" = 1'-0"
(Re. sht. 23)

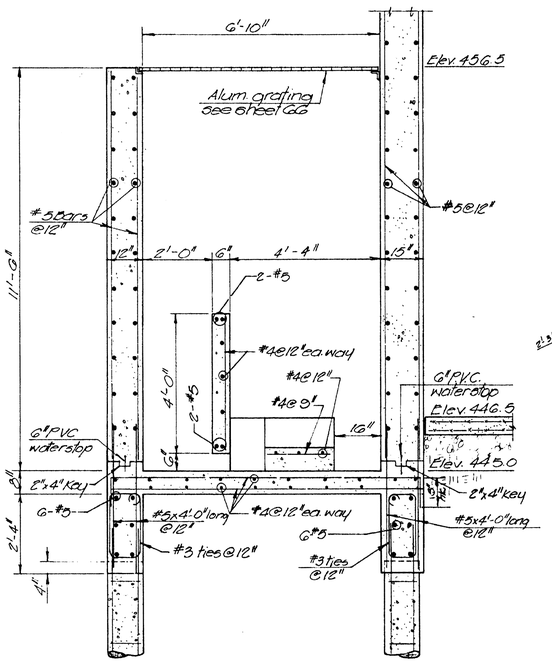

SECTION 6/25
Scale: 1/2" = 1'-0"
(Re. sht. 23).

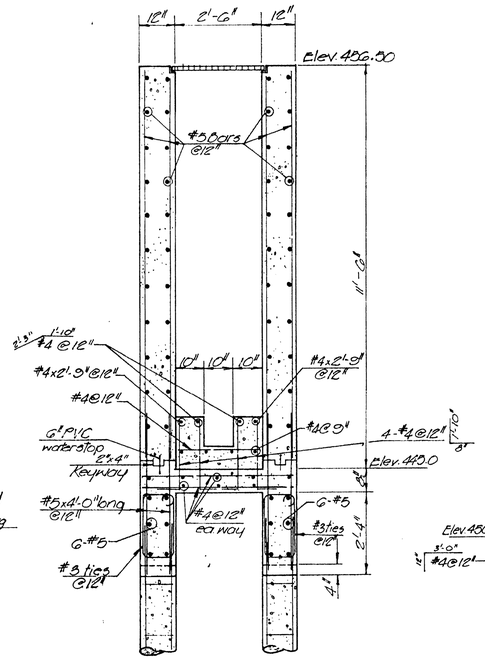

SECTION 7/25
Scale: 1/2" = 1'-0"
(Re. sht. 23)

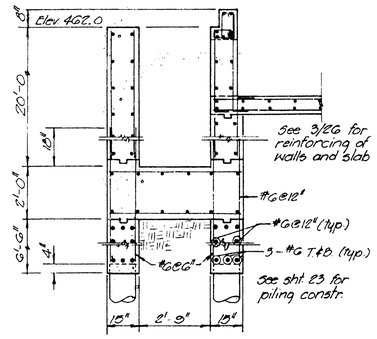

SECTION 8/25
Scale: 3/8" = 1'-0"
(Re. sht. 23)

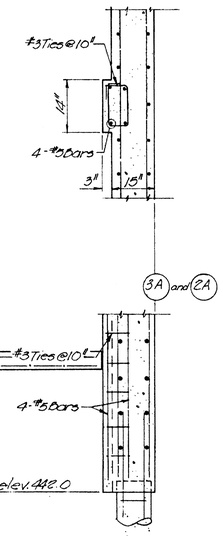

SECTION 9/23
Scale: 1/2" = 1'-0"
(Re. sht. 23)

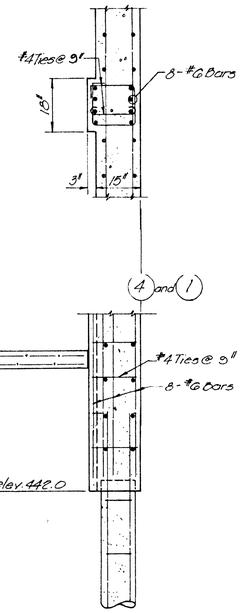

SECTION 10/26
Scale: 1/2" = 1'-0"
(Re. sht. 23)

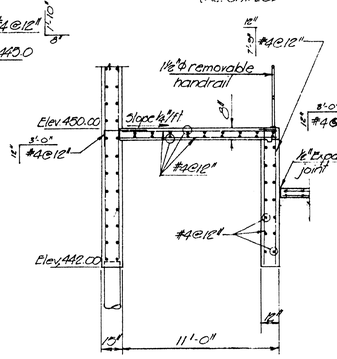

SECTION 11/26
Scale: 1/4" = 1'-0"
(Re. sheet 23)

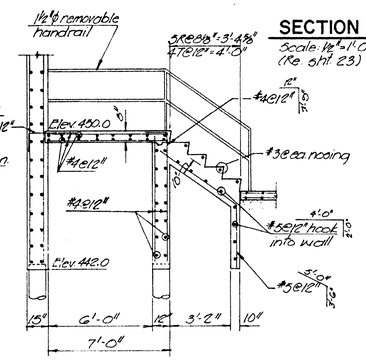

SECTION 12/26
Scale: 1/4" = 1'-0"
(Re. sheet 23)

EPA PROJECT NO. C291090

Revised 3/9/82 C. Raya

GBA
GEORGE BUTLER ASSOCIATES
CONSULTING ENGINEERS/ARCHITECTS
LANDSCAPE ARCHITECTS/PLANNERS

OFFICES:
SUITE 305-A FAIRWAY OFFICE CENTER
4210 JOHNSON DRIVE / SHAWNEE MISSION / KANSAS 66205
1100 CITY CENTER SQUARE
1100 MAIN / KANSAS CITY / MISSOURI 64105
SUITE 134 LAKESIDE PLAZA II
8700 CORPORATE DRIVE / KANSAS CITY / MISSOURI 64120

WASTEWATER TREATMENT PLANT EXPANSION

BIO-FILTER COMPLEX FOUNDATION SECTIONS

CITY OF O'FALLON, MISSOURI

JOB NO	79-2065
DATE	July 30, 1981
SCALE	As shown
SHEET NO	25 OF 88

DESIGNED BY: J.L.J. | DRAWN BY: C. Raya | CHECKED BY: M.L.J.