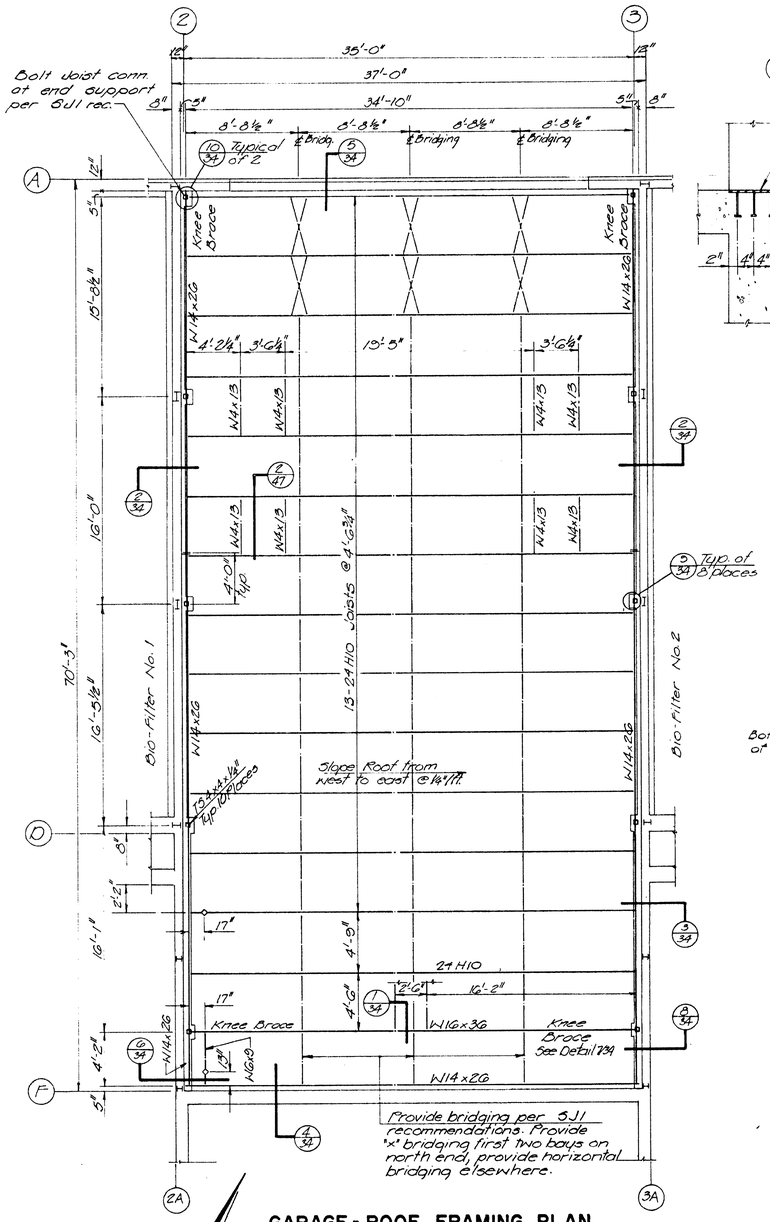

GARAGE - ROOF FRAMING PLAN

Scale: 3/16" = 1'-0"

NOTES:

1. The roof deck shall be Type A galvanized metal deck and shall develop a design shear of 150 pounds per lineal foot as a diaphram and shall be welded in a 4W-1 pattern as specified by Wheeling Corrugating Company.
2. Support steel in metal wall panel not shown.
3. ◊ - Indicates pipe support saddle, pipe, & floor flange.

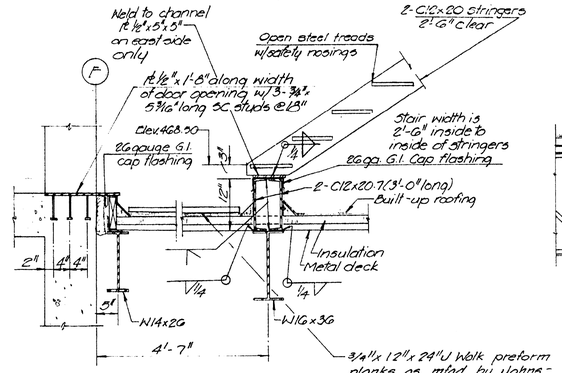

SECTION 1/34

Scale: ¾" = 1'-0"

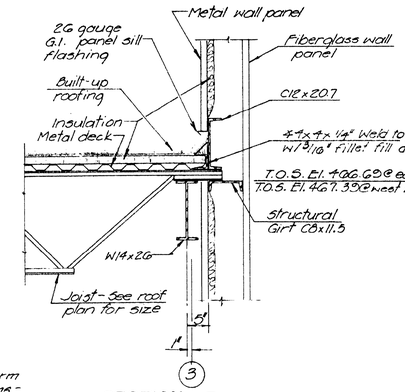

SECTION 2/34

Scale: ¾" = 1'-0"

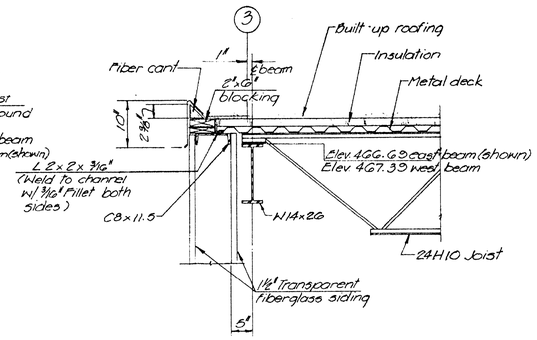

SECTION 3/34

Scale ¾" = 1'-0"

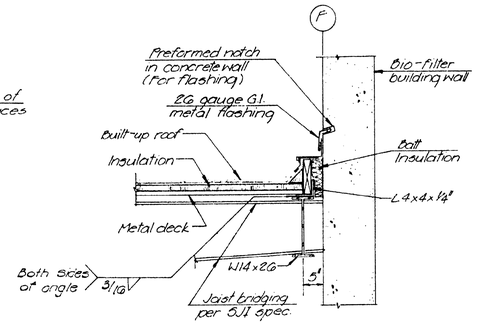

SECTION 4/34

Scale: ¾" = 1'-0"

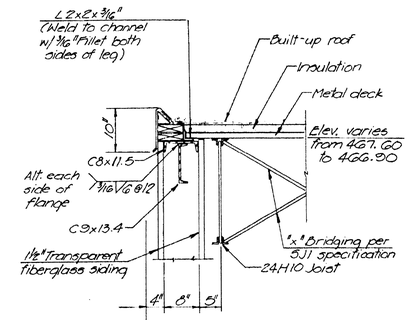

SECTION 5/34

Scale: ¾" = 1'-0"

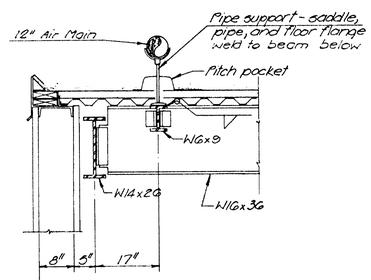

SECTION 6/34

Scale: ¾" = 1'-0"

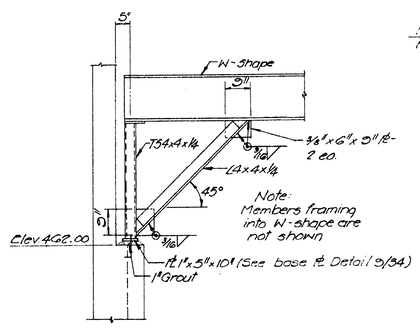

KNEE BRACE DETAIL 7/34

Scale: ½" = 1'-0"
(Typ. 4 places)

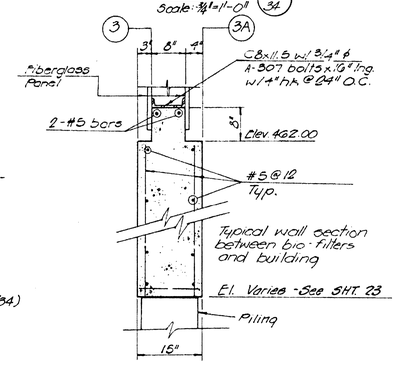

WALL SECTION 8/34

Scale: 3/4" = 1'-0"

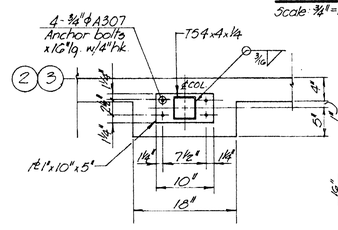

COLUMN BASE PL. 9/34

(Typical 8 places)
Scale: 1" = 1'-0"

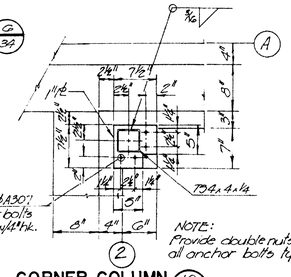

CORNER COLUMN BASE PLATE 10/34

(Typical 2 places)
Scale: 1" = 1'-0"

EPA PROJECT NO. C291090

GBA
GEORGE BUTLER ASSOCIATES
CONSULTING ENGINEERS / ARCHITECTS
LANDSCAPE ARCHITECTS / PLANNERS

OFFICES:
SUITE 305 A FAIRWAY OFFICE CENTER
4210 JOHNSON DRIVE / SHAWNEE MISSION / KANSAS 66205
1100 CITY CENTER SQUARE
1100 MAIN / KANSAS CITY / MISSOURI 64105
SUITE 134 LAKESIDE PLAZA II
6700 CORPORATE DRIVE / KANSAS CITY / MISSOURI 64120

WASTEWATER TREATMENT PLANT EXPANSION

BIO-FILTER COMPLEX — GARAGE ROOF FRAMING PLAN & SECTIONS

CITY OF O'FALLON, MISSOURI

JOB NO	80-2065
DATE	7/30/81
SCALE	As shown
SHEET NO	34 OF 88

DESIGNED BY J.L.S. | DRAWN BY C. Raya | CHECKED BY M.L.S