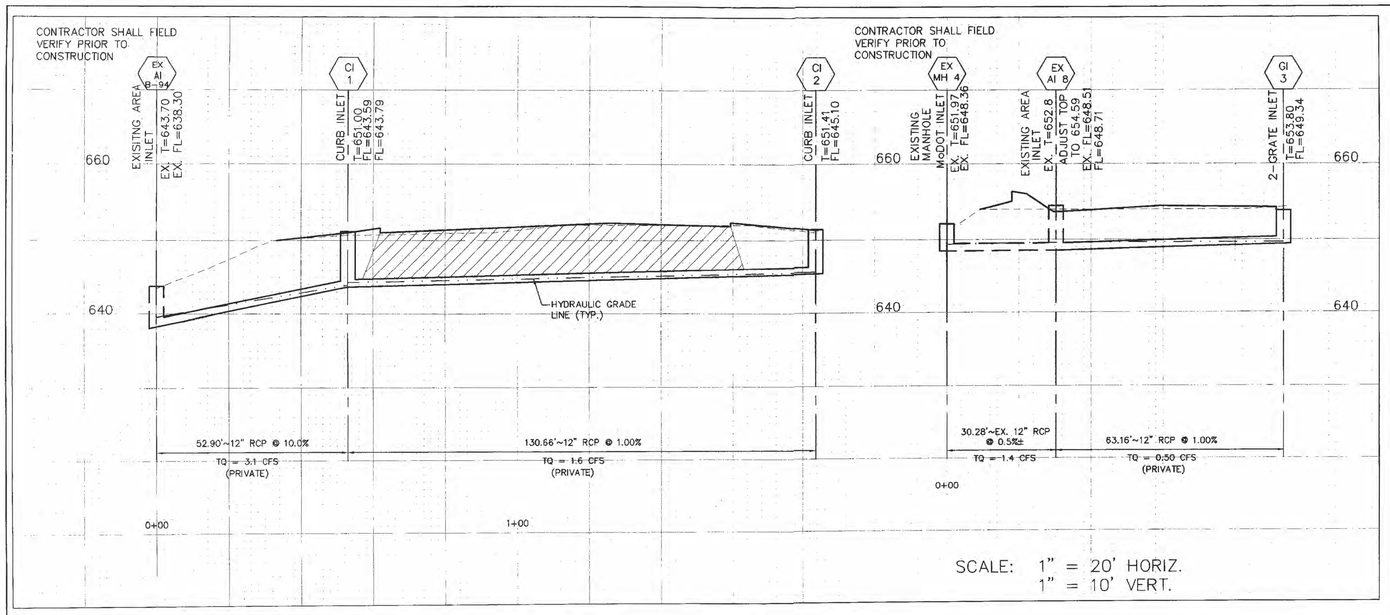

ROUND PIPE				HORIZONTAL ELLIPTICAL PIPE			
Inside Diameter of Pipe (Inches)	"W" Payline Width of Trench (Inches)	"W" Payline Width of Trench (Feet)	Pay-volumes cu. ft. per ft. Concrete Encasement	Inside Diameter of Pipe (Inches)	"W" Payline Width of Trench (Inches)	"W" Payline Width of Trench (Feet)	Pay-volumes cu. ft. per ft. Concrete Encasement
4	28	2.33	3.20				
6	28	2.33	3.46				
8	28	2.33	3.70				
10	28	2.33	3.86				
12	28	2.33	3.98				
15	32	2.67	4.89				
18	35	2.92	5.63	14 X 23	41	3.42	5.94
21	39	3.25	6.61				
24	42	3.50	7.39	19 X 30	49	4.08	7.58
27	45	3.75	8.18	22 X 34	53	4.42	8.61
30	49	4.08	9.30	24 X 38	58	4.83	9.70
33	53	4.42	10.53	27 X 42	62	5.17	10.71
36	56	4.67	11.43	29 X 45	66	5.50	11.72
39	DISCONTINUED			32 X 49	71	5.92	13.14
42	63	5.25	13.38	34 X 53	75	6.25	14.05
48	70	5.83	15.67	38 X 60	83	6.92	16.18
54	77	6.42	18.15	43 X 68	92	7.67	18.81
60	84	7.00	20.73	48 X 76	101	8.42	21.59
66	91	7.58	23.49	53 X 83	109	9.08	24.35
72	98	8.17	26.37	58 X 91	118	9.83	27.45
78	105	8.75	29.39	63 X 98	126	10.50	30.50
84	112	9.33	32.57	68 X 106	135	11.25	33.91
90	119	9.92	35.90	72 X 113	143	11.92	36.99
96	126	10.50	39.37	77 X 121	152	12.67	40.69
102	133	11.08	42.99	82 X 128	160	13.33	44.45
108	140	11.67	46.75	87 X 136	168	14.00	47.79
114	147	12.25	50.66	92 X 143	176	14.67	51.70
120	154	12.83	54.72	97 X 151	185	15.42	56.01
126	161	13.42	58.92				
132	168	14.00	63.27	106 X 166	202	16.83	64.46
144	182	15.17	72.40	115 X 180	218	18.17	73.59

TABLE NO. 1
PAYLINE WIDTHS OF TRENCH AND PAY-QUANTIES OF CONCRETE

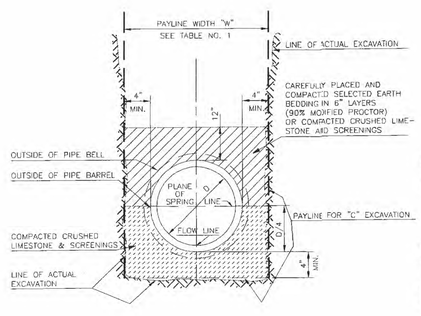

PIPE BEDDING CLASS "C"
(FOR ALL PIPE EXCEPT
REINFORCED CONCRETE PIPE)

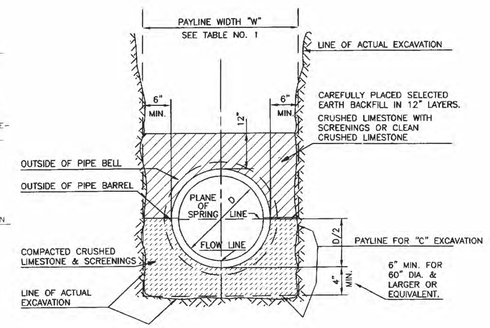

PIPE BEDDING CLASS "C"
(MODIFIED FOR REINFORCED
CONCRETE PIPE)

APPENDIX A

Seeding Rates:

Permanent:

Tall Fescue – 30 lbs./ac.
Smooth Brome – 20 lbs./ac.
Combined: Fescue @ 15 lbs./ac. and Brome @ 10 lbs./ac.

Temporary:

Wheat or Rye – 150 lbs./ac. (3.5 lbs. per square foot)
Oats – 120 lbs./ac. (2.75 lbs. per square foot)

Seeding Periods:

Fescue or Brome – March 1 to June 1
August 1 to October 1

Wheat or Rye – March 15 to November 1
Oats – March 15 to September 15

Mulch rates: 100 lbs. per 1,000 sq. ft. (4,356 lbs. per acre)

Fertilizer rates: Nitrogen 30 lbs./ac.
Phosphate 30 lbs./ac.
Potassium 30 lbs./ac.
*Lime 600 lbs./ac. ENM**

**ENM = effective neutralizing material as per State evaluation of quarried rock.*

SYNTHETIC FILTER BARRIERS
For Urban Development Sites

APPENDIX D

MAINTENANCE

1. Filter barriers shall be inspected immediately after each rainfall and at least daily during prolonged rainfall. Any required repairs shall be made immediately.
2. Should the fabric decompose or become ineffective prior to the end of the expected usable life and the barrier still be necessary, the fabric shall be replaced promptly.
3. Sediment deposits should be removed after each storm event. They must be removed when deposits reach approximately half the height of the barrier.
4. Any sediment deposits remaining in place after the silt fence or filter barrier is no longer required shall be dressed to conform with the existing grade, prepared and seeded.

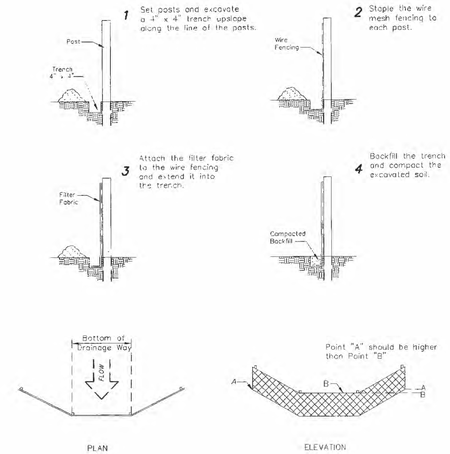

Placement and Construction of a Synthetic Filter Barrier

CONSTRUCTION SPECIFICATIONS

1. Stone Size: Use 2" stone or reclaimed or recycled concrete equivalent
2. Length: As required, but not less than 50 feet (except on a single residence lot where a 30 foot minimum length would apply).
3. Thickness: Not less than six (6) inches.
4. Width: Twenty six (26) foot minimum, but not less than the full width at points where ingress or egress occurs.
5. Filter Cloth: Will be placed over the entire area prior to placing of the stone. Filter will not be required on a single family residence lot.
6. Surface Water: All surface water flowing or diverted toward construction entrances shall be piped across the entrance. If piping is impractical, a mountable berm with a 5:1 slope will be permitted.
7. Maintenance: The entrance shall be maintained in a condition which will prevent tracking or flowing of sediment onto a public right-of-way. This may require periodic top dressing with additional stone as conditions demand and repair and/or cleanout of any measures used to trap sediment. All sediment spilled, dropped, washed or tracked onto the public right-of-way must be removed immediately.
8. Washing: Wheels shall be cleaned to remove sediment prior to entrance onto the public right-of-way. When washing is required, it shall be done on an area stabilized with stone and which drains into an approved sediment trapping device.
9. Periodic inspection and needed maintenance shall be provided after each rain.

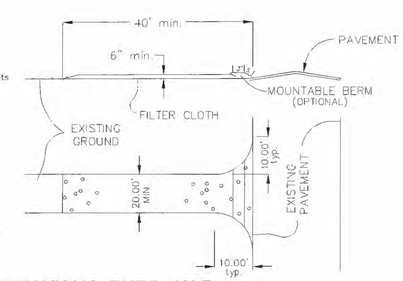

STABILIZED CONSTRUCTION ENTRANCE AND TEMP. TRUCK WASHDOWN AREA DETAIL

N.T.S.

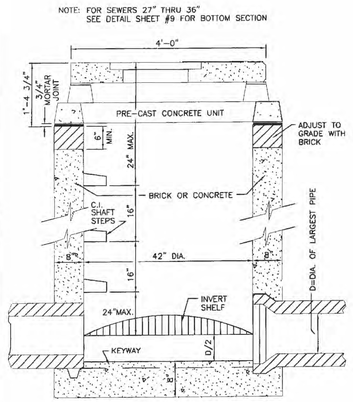

AREA INLET
(12" THRU 24")

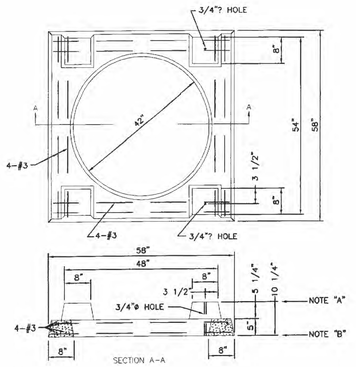

4000 P.S.I.
CONCRETE REQUIRED

NOTES:
A. SET STANDARD INLET STONE IN 3/4" MORTAR BED AND DOWEL WITH 5/8"? 1'-0" LONG PINS AND GROUT.
B. RAISE TO FINAL GRADE WITH COURSES OF BRICK AND SET THE UNIT TO BASE WITH 3/4" MORTAR BED.
C. THIS UNIT TO BE USED WITH, 42" I.D., POURED IN PLACE CONCRETE OR BRICK BASE.

PRECAST CONCRETE UNIT
FOR
4-WAY AREA INLET

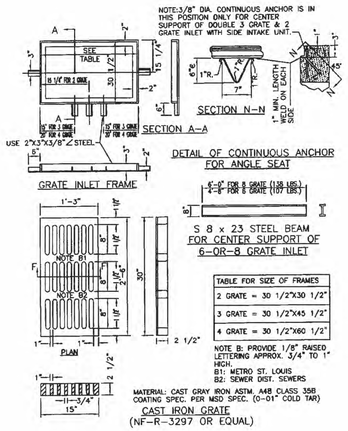

TABLE FOR SIZE OF FRAMES
2 GRATE = 30 1/2"X30 1/2"
3 GRATE = 30 1/2"X45 1/2"
4 GRATE = 30 1/2"X60 1/2"

DETAILS OF INLET
FRAME AND GRATES

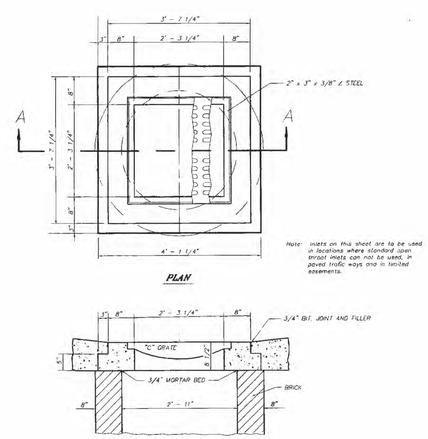

2 GRATE INLET

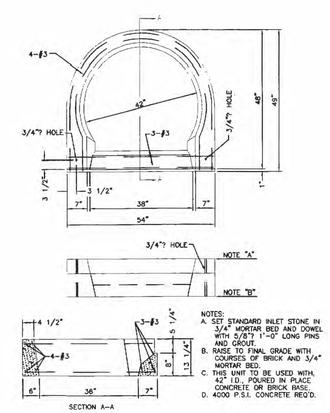

NOTES:
A. SET STANDARD INLET STONE IN 3/4" MORTAR BED AND DOWEL WITH 5/8"? 1'-0" LONG PINS AND GROUT.
B. RAISE TO FINAL GRADE WITH COURSES OF BRICK AND 3/4" MORTAR BED.
C. THIS UNIT TO BE USED WITH, 42" I.D., POURED IN PLACE CONCRETE OR BRICK BASE.
D. 4000 P.S.I. CONCRETE REQ'D.

PRECAST CONCRETE UNIT
FOR
SINGLE CURB INLET

FILE #3203.05

PICKETT RAY & SILVER
CIVIL ENGINEERS
PLANNERS
LAND SURVEYORS
333 Mid Rivers Mall Drive
St. Peters, MO 63376
Phone (636) 397-1211
Fax (636) 397-1104

BRIGHT START
IMPROVEMENT PLANS
ST. CHARLES, MO

239 FOX HILL ROAD
ST. CHARLES, MO 63301
(636)940-9300

Prepared For:
SUMMIT POINTE, L.L.C.

REVISIONS

NO.	DATE	
1	01-09-06	PER CITY OF O'FALLON
2	1.16.06	REVISED PER T.R. HUGHES
3	3-10-06	REVISED PER CITY OF O'FALLON
4	3-31-06	REVISED PER CITY OF O'FALLON

ENGINEERS AUTHENTICATION
The responsibility for professional engineering liability on this project is hereby limited to the set of plans authenticated by the seal, signature, and date hereunder attached. Responsibility is disclaimed for all other engineering plans involved in this project and specifically excludes revisions after this date unless reauthenticated.
PICKETT, RAY & SILVER, INC

DRAWN B.PARKS	DATE 12-05-05
CHECKED D.BYRD	DATE 12-05-05
PROJECT # 01267.BRST.00C	
TASK # 2	FIELD BOOK X

BRIGHT START
IMPROVEMENT PLANS
SEWER PROFILES/
CONSTRUCTION DETAILS
SHEET 5 OF 7

© Copyright 2004 by Pickett, Ray & Silver Inc.

3servrprs\Projects\01267\dwg\01267\BRIGHTS\ART REVISED DES 12-5-05.dwg, 3/31/2006 11:14:05 AM, DEBBIE STOSZ