ISSUE	REMARKS/DATE
1	2020-12-31 INITIAL SUBMITTAL
2	2021-02-23 CITY COMMENT
3	2021-04-13 CITY COMMENT
4	2021-05-26 CITY COMMENT
5	2021-06-15 FOR APPROVAL

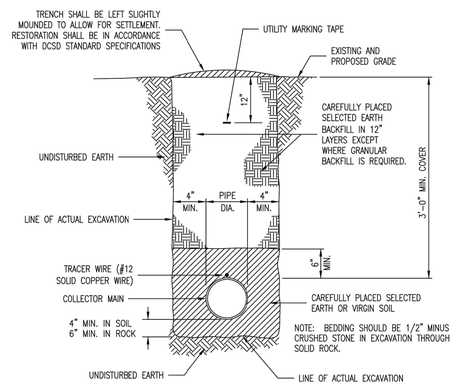

COLLECTOR MAIN AND INSTALLATION

N.T.S.

NOTE:
SEE SECTION D OF THE DUCKETT CREEK SANITARY DISTRICT LPSS SPECIFICATIONS FOR TRACER WIRE INSTALLATION AND TESTING REQUIREMENTS.

Duckett Creek Sanitary District				
COLLECTOR MAIN BEDDING AND INSTALLATION	Dwn By: MSM	App By: KA	Detail No.	LP-1
	Ckd By:	Date: Dec. 2019		

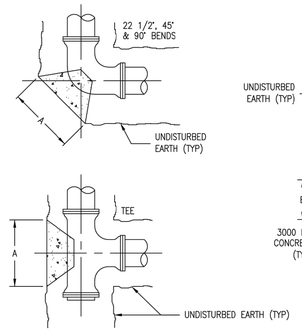

LPSS COLLECTOR MAIN PVC SDR 21 SIZE MIN. 2" I.D., THRUST BLOCK SIZE TO BE DETERMINED BY ENGINEER .

NOTES:
1. ALL A & B DIMENSIONS TO BE AS REQUIRED TO REACH UNDISTURBED EARTH BUT NOT LESS THAN LISTED ON THRUST BLOCK TABLE.
2. DIMENSIONS A & B APPLY TO ALL BEND CONDITIONS SHOWN.
3. INSTALL PLUGS AT ALL RUNS OR BRANCHES DISCONTINUED FOR FUTURE SERVICES.
4. ALL BENDS, TEES, PLUGS, FITTINGS OR OTHER SIGNIFICANT CHANGES SHALL BE BRACED WITH POURED CONCRETE THRUST BLOCK AS SHOWN ON THIS DETAIL.
5. ALL PLUGS SHALL BE SEPARATED FROM THE CONCRETE THRUST BLOCK BY A 5 MIL LAYER OF PLASTIC SHEETING.

MAIN SIZE	A x B 22½°	A x B 45°	A x B 90°	A x B TEE
2"	.5' x 1'	.5' x 1'	1' x 1'	1' x 1'
4"	1' x 1'	1' x 1'	1.5' x 1'	1' x 1'
6"	1' x 1'	1.5' x 1'	2' x 1'	1.5' x 1'
8"	1' x 1'	2' x 1'	2' x 1'	2' x 1'

Duckett Creek Sanitary District				
THRUST BLOCK DETAIL AND SIZE SCHEDULE	Dwn By: MSM	App By: KLA	Detail No.	LP-2
	Ckd By:	Date: Dec. 2019		

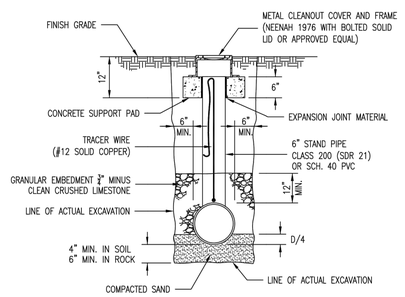

TRACER WIRE ACCESS DETAIL

N.T.S.

NOTES:
1. ALL SPLICES OF TRACER WIRE MUST BE MADE WITH 3M WATERPROOF SPLICE KITS OR APPROVED EQUAL.
2. A MINIMUM OF 5' OF EXCESS FROM EACH DIRECTION SHALL BE ROLLED UP AND BE AVAILABLE AT THE TOP OF THE TRACER ACCESS BOX.

Duckett Creek Sanitary District				
TRACER WIRE ACCESS DETAIL	Dwn By: MSM	App By: KA	Detail No.	LP-3
	Ckd By:	Date: Dec. 2019		

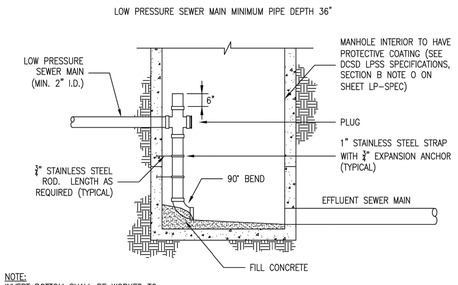

NOTE:
INVERT BOTTOM SHALL BE WORKED TO PROVIDE POSITIVE DRAINAGE THROUGH MANHOLE

LPSS CONNECTION AT MANHOLE

N.T.S.

Duckett Creek Sanitary District				
LOW PRESSURE CONNECTION AT MANHOLE	Dwn By: MSM	App By: KLA	Detail No.	LP-4
	Ckd By:	Date: Dec. 2019		

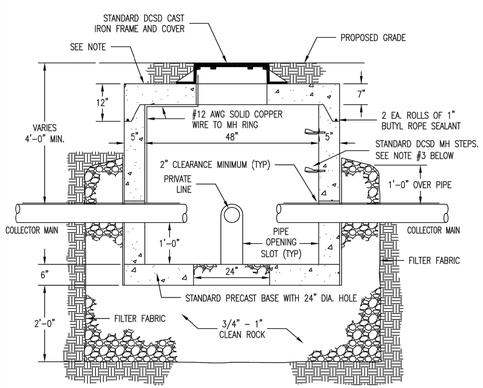

NOTES:
1. ALL TOPS MUST BE REINFORCED. SUBMIT DESIGN FOR ALL TOPS SUBJECT TO VEHICLE LOADING.
2. MANHOLE STEPS SHALL BE UNIFORMLY SPACED AT 16" CENTER TO CENTER AND SHALL EXTEND 5-3/4" FROM WALL. SEE DCSD STANDARD DETAIL #18 FOR ADDITIONAL INFORMATION. POSITION STEPS IN BEST POSITION NOT TO INTERFERE WITH FITTINGS AND PIPE.
3. FINISHED GRADE SHALL PROVIDE DRAINAGE AWAY FROM ACCESS LID.

Duckett Creek Sanitary District				
SECTION VALVE VAULT 2" COLLECTOR MAIN	Dwn By: MSM	App By: KA	Detail No.	LP-5
	Ckd By:	Date: Dec. 2019		

1. 2" PVC PIPE SCHEDULE 80 GRV x PE
2. 2" SDR 21 PVC
3. 2" SCHEDULE 80 PVC COUPLING
4. 2" VICTAULIC NO. 75 FLEXIBLE COUPLING
5. 2" VICTAULIC NO. 726 BALL VALVE
6. 2" VICTAULIC NO. 712 CHECK VALVE
7. 2 x 2 TEE IPS VICTAULIC NO. 20 THM 140
8. 2" SCHEDULE 80 SOLVENT WELD COUPLING WITH REDUCER BUSHING TO LATERAL SIZE

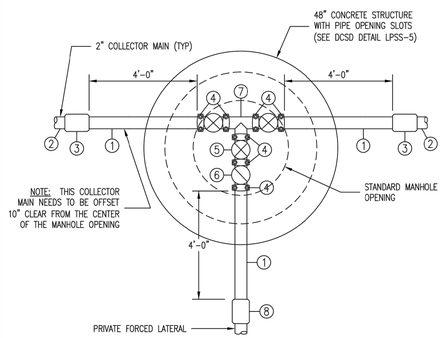

NOTES:
1. USE STAINLESS STEEL BOLTS AT ALL FLANGED CONNECTIONS.
2. STAMPED ALUMINUM IDENTIFICATION TAGS MUST BE WIRED TO EACH VALVE. THEY ARE TO IDENTIFY THE 2" VALVES AS "DCSD UPSTREAM", "DCSD DOWNSTREAM" AND "PRIVATE SERVICE". THE ADDRESS OF THE LATERAL SHALL BE CLEARLY STAMPED ON THE PRIVATE VALVE TAG.

Duckett Creek Sanitary District				
PLAN SINGLE VALVE VAULT 2" COLLECTOR MAIN	Dwn By: MSM	App By: KA	Detail No.	LP-6
	Ckd By:	Date: Dec. 2019		

1. 2" PVC PIPE SCHEDULE 80 GRV x PE
2. 2" SDR 21 PVC
3. 2" SCHEDULE 80 PVC COUPLING
4. 2" VICTAULIC NO. 75 FLEXIBLE COUPLING
5. 2" VICTAULIC NO. 726 BALL VALVE
6. 2" VICTAULIC NO. 712 CHECK VALVE
7. 2 x 2 TEE IPS VICTAULIC NO. 20 THM 140
8. 2" SCHEDULE 80 SOLVENT WELD COUPLING WITH REDUCER BUSHING TO LATERAL SIZE
9. 2" VICTAULIC NO. 33 TRUE WYE
10. 2" VICTAULIC NO. 10 45° ELBOW

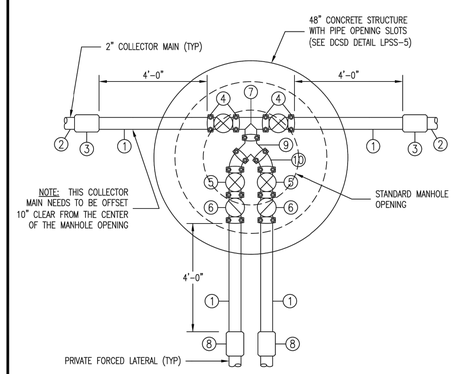

NOTES:
1. USE STAINLESS STEEL BOLTS AT ALL FLANGED CONNECTIONS.
2. STAMPED ALUMINUM IDENTIFICATION TAGS MUST BE WIRED TO EACH VALVE. THEY ARE TO IDENTIFY THE 2" VALVES AS "DCSD UPSTREAM", "DCSD DOWNSTREAM" AND "PRIVATE SERVICE". THE ADDRESS OF THE LATERAL SHALL BE CLEARLY STAMPED ON THE PRIVATE VALVE TAG.

Duckett Creek Sanitary District				
PLAN DUAL VALVE VAULT 2" COLLECTOR MAIN	Dwn By: MSM	App By: KA	Detail No.	LP-7
	Ckd By:	Date: Dec. 2019		

PROJECT TITLE

BROOKSIDE ADDITION

O'FALLON, MISSOURI

THE STERLING CO.
ENGINEERS & SURVEYORS
5055 New Baumgartner Road
St. Louis, Missouri 63129
Ph 314-487-0440 Fax 314-487-8944
www.sterling-eng-sur.com
Corporate Certificate of Authority #001348

The Professional Engineer's seal and signature affixed to this document indicates that the document was prepared by me or under my direct supervision and that I am a duly licensed professional engineer. Unless the seal and signature shall first be considered prepared by this engineer, and the engineer assumes no responsibility for such plans, drawings or documents not sealed and signed by the engineer.

STATE OF MISSOURI MICHAEL G. BOERDING NUMBER PE-28643 PROFESSIONAL ENGINEER

Date: 06-15-2021
Michael G.Boerding, PE
License No. MO E-28643
Professional Engineer

LOMBARDO HOMES OF ST. LOUIS, LLC
2299 TECHNOLOGY DRIVE, SUITE 150
O'FALLON, MISSOURI 63368
Ph. 636-265-2710
Fax 636-695-3195

LOW PRESSURE SEWER DETAILS

P+Z No.	20-001538
City No.	20-009251
Date:	JUNE 15, 2021
Job No.	19-10-344

Page No.

DTL-3

IMP

"PRELIMINARY PLAT" Approval Date: September 3, 2020

Drawing name: V:\1910344 Fieldwert Lombardo\Drawings\Engineering\Improvements\03444\IMP DETAILS.dwg Plotted on: Jun 15, 2021 - 7:57am Plotted by: jluebkenhaus