NOTE: ALL NON-REINFORCED CONCRETE SHALL BE 4,000 P.S.I. AT 28 DAYS.

ISSUE	DATE / REMARKS
1	08/28/2017 Initial Submittal
2	10/06/2017 City Comments
3	11/10/2017 City Comments
4	12/16/2017 City Comments
5	01/11/2018 City Resubmittal

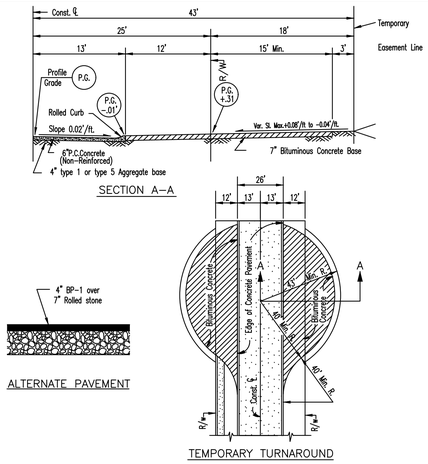

GENERAL NOTES

1. Do not scale drawing. Follow dimensions.
2. For longitudinal and transverse joints, dowel and tie bar requirements and curb dimensions not shown refer to the Pavement Construction Details for "Joints and Curbs.
3. All necessary pavement markings shall be as required by City of O'Fallon.
4. For roadway cross slopes, pavement types and thickness refer to "Standard Typical Sections.
5. Permits will not be issued for building construction on lots abutting a temporary turnaround unless and until the turnaround is actually constructed.
6. The removal of the temporary turnaround surface, the restoration of the disturbed ground, and the extension of any sidewalk shall be the responsibility of the party(ies) that will be extending the street.
7. Other temporary turn around types can be considered depending on type and dimensions
8. Stub streets over two hundred fifty (250) feet shall have a minimum temporary turnaround pavement radius of forty (40) feet, covered by a temporary turnaround easement to remain until the road is extended and platted. In lieu of turnarounds, the Planning and Zoning Commission may approve a "T" or "Y" shaped paved space on streets which are less than two hundred fifty (250) feet in length and are planned to be extended in the future.

CITY OF O'FALLON
ENGINEERING DEPARTMENT
O'FALLON, MISSOURI

PAVEMENT CONSTRUCTION DETAILS
RESIDENTIAL
TEMPORARY TURNAROUND

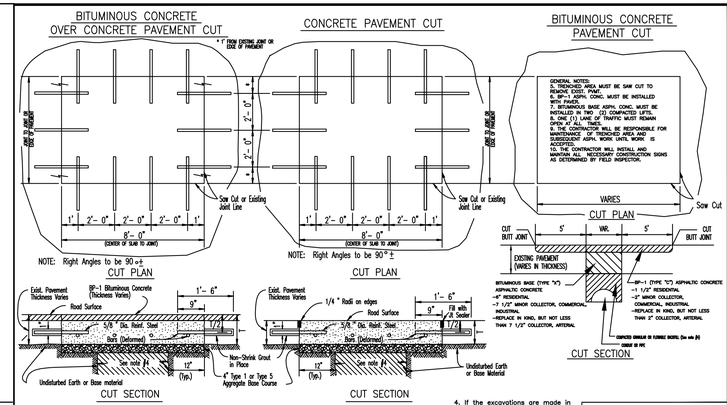

GENERAL NOTES

1. If a permit is issued to replace the existing asphaltic concrete pavement with full depth bituminous concrete pavement and concrete pavement is found under the existing asphaltic concrete pavement, the applicant will be required to follow the Detail for Bituminous Concrete over Concrete Pavement Cut. The applicant will use Duracrete or equivalent to replace the existing concrete and use 4" Type 1 or type 5 Aggregate over Granular Backfill or Pugmill as a subbase. Duracrete sets up in approximately 4 hours at which time the BP-1 Bituminous Concrete Overlay can be applied to the base course.

2. If Bituminous Concrete over Concrete Pavement or Concrete Pavement is broken before executing the pavement full concrete slab replacement will be required.

3. Minimum Thickness for Pavement Replacement is:

	CONCRETE (T)	BITUMINOUS (T)
All Residential Minor and Local Streets	6"	7 1/2
Residential Collector, All Courts and Non-Residential Streets	7"	9 1/2"
All Arterial Streets	8"	12"

Pavement replacement will require 4" Type 1 or Type 5 Aggregate Base Course, Granular Backfill and Base will be compacted by mechanical tamping methods in lifts no greater than 6 inches.

4. If the excavations are made in the improved portion of the ROW, backfill with 2" granular backfill to within 12 inches of the surface and controlled low strength material (CLSM) aka flowable fill will fill the hole within eight inches of the finished surface for concrete pavement. There will be a plastic separation layer between the rock base and the CLSM to prevent the material from bleeding into the rock base. The remaining eight inches will be restored by placing a twenty eight day minimum strength, four thousand psi concrete mix.

CITY OF O'FALLON
ENGINEERING DEPARTMENT
O'FALLON, MISSOURI

DETAILS OF TEMPORARY OPENINGS IN ROADWAY PAVEMENT

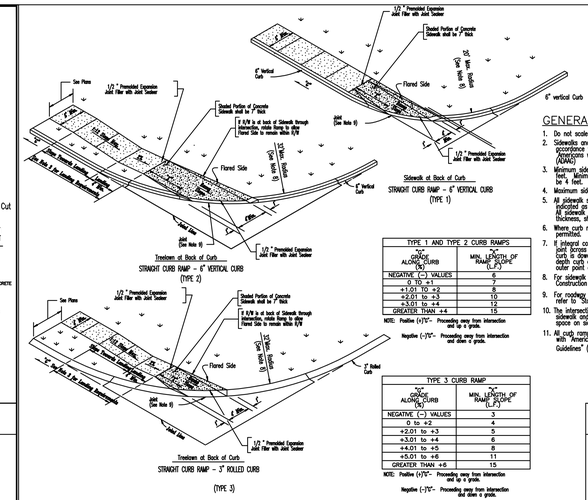

TYPE 1 AND TYPE 2 CURB RAMPS	
"X" GRADE ALONG CURB	MIN. LENGTH OF RAMP SLOPE (L.F.)
NEGATIVE (-) VALUES	6
0 TO +.9	7
+1.01 TO +2	8
+2.01 to +3	10
+3.01 to +4	12
GREATER THAN +4	15

NOTE: Positive (+)"X"- Proceeding ramp from intersection and up a grade.
Negative (-)"X"- Proceeding ramp from intersection and down a grade.

TYPE 3 CURB RAMP	
"X" GRADE ALONG CURB (%)	MIN. LENGTH OF RAMP SLOPE (L.F.)
NEGATIVE (-) VALUES	3
0 to +2	4
+2.01 to +3	5
+3.01 to +4	6
+4.01 to +5	8
+5.01 to +6	11
GREATER THAN +6	15

NOTE: Positive (+)"X"- Proceeding ramp from intersection and up a grade.
Negative (-)"X"- Proceeding ramp from intersection and down a grade.

GENERAL NOTES

1. Do not scale drawing. Follow dimensions.
2. Sidewalks and sidewalk curb ramps shall be constructed in accordance with these details and the current approved ADAG Guidelines (ADAG).
3. Minimum sidewalk width along 6" vertical curb shall be 5 feet. Minimum sidewalk width along 3" rolled curb shall be 4 feet.
4. Maximum sidewalk cross slope 0.02'/ft..
5. All sidewalk sections shall be 4" thick, except where indicated as 7" thick by shaded portions shown on details. All sidewalk sections and curb ramps, regardless of thickness, shall be paid for as "Concrete sidewalk".
6. Where curb ramp meets pavement, Bullnose will not be permitted.
7. If integral concrete curb is constructed, strike a dummy joint (across bottom of ramp at curb line. If concrete curb is doweled-on, block out pavement to provide full depth curb across ramp from outer point of curb taper to outer point of curb taper.
8. For sidewalk locations on Cul-De-Sacs, refer to "Pavement Construction Details".
9. For roadway cross slopes, pavement types, and thicknesses, refer to "Standard Typical Sections".
10. The intersection of two sidewalks or the intersection of a sidewalk and a driveway may serve as a wheelchair passing space on sidewalks less than 5 feet wide.
11. All curb ramps shall have a detectable warning complying with "Americans with Disabilities Act Accessibility Guidelines" (ADAG).

CITY OF O'FALLON
ENGINEERING DEPARTMENT
O'FALLON, MISSOURI

CONCRETE SIDEWALK
WITHIN CUL-DE-SACS

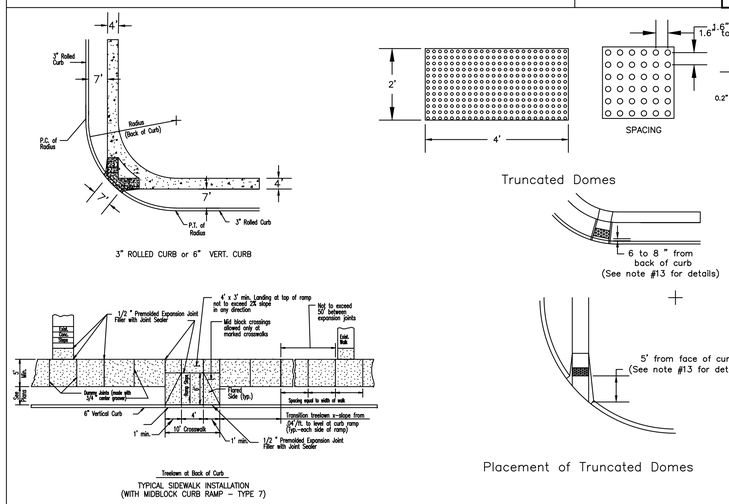

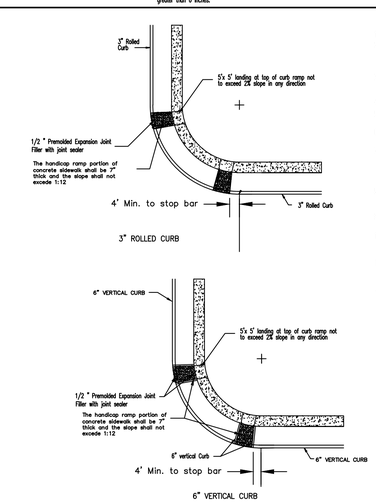

GENERAL NOTES

1. Do not scale drawing. Follow dimensions.
2. Sidewalks and sidewalk curb ramps shall be constructed in accordance with these details and the current approved ADAG Guidelines (ADAG).
3. Minimum sidewalk width along 6" vertical curb shall be 5 feet. Minimum sidewalk width along 3" rolled curb shall be 4 feet.
4. Maximum sidewalk cross slope 0.02'/ft..
5. All sidewalk sections shall be 4" thick, except where indicated as 7" thick by shaded portions shown on details.
6. Where curb ramp meets pavement, Bullnose will not be permitted.
7. If integral concrete curb is constructed, strike a dummy joint (across bottom of ramp at curb line. If concrete curb is doweled-on, block out pavement to provide full depth curb across ramp from outer point of curb taper to outer point of curb taper.
8. For pavement longitudinal and transverse joints and dowel and tie bar requirements and dimensions, refer to the Pavement Construction Details for "Joints and Curbs".
9. For roadway cross slopes, pavement types, and thicknesses, refer to "Standard Typical Sections".
10. The intersection of two sidewalks or the intersection of a sidewalk and a driveway may serve as a wheelchair passing space on sidewalks less than 5 feet wide.
11. All curb ramps shall have a detectable warning complying with "Americans with Disabilities Act Accessibility Guidelines" (ADAG).
12. All ramps must line up with the coresponding ramp on the other side of the street or intersection.
13. All truncated domes shall run paralle to the road that it's crossing.
14. Truncated warning domes shall not be stamped and will be a ADA approved product.

CITY OF O'FALLON
ENGINEERING DEPARTMENT
O'FALLON, MISSOURI

PAVEMENT CONSTRUCTION DETAILS
CONCRETE SIDEWALK
AND CURB RAMPS

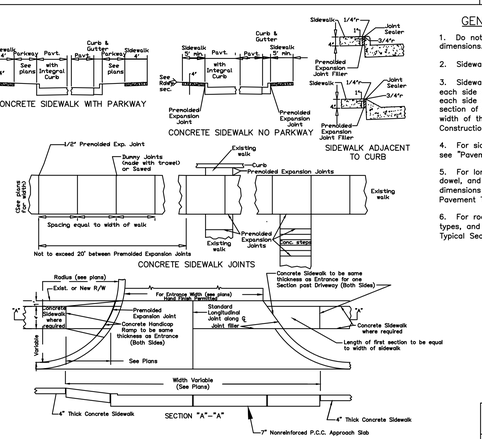

GENERAL NOTES

1. Do not scale drawing. Follow dimensions.
2. Sidewalk cross slope 0.02'/ft.
3. Sidewalk thickness increases to 6" on each side of Private Driveways and 7" on each side of Commercial Driveways for one section of sidewalk equal in length to the width of the sidewalk. See "Entrance Construction Details".
4. For sidewalk locations on Cul-De-Sacs see "Pavement Construction Details".
5. For longitudinal and transverse joints, dowel, and tie bar requirements and dimensions refer to the "Integral Curb Pavement Typical Sections and Details".
6. For roadway cross slopes, pavement types, and thickness, refer to "Standard Typical Section".

CITY OF O'FALLON
ENGINEERING DEPARTMENT
O'FALLON, MISSOURI

CONCRETE SIDEWALK
THROUGH
COMMERCAL ENTRANCES

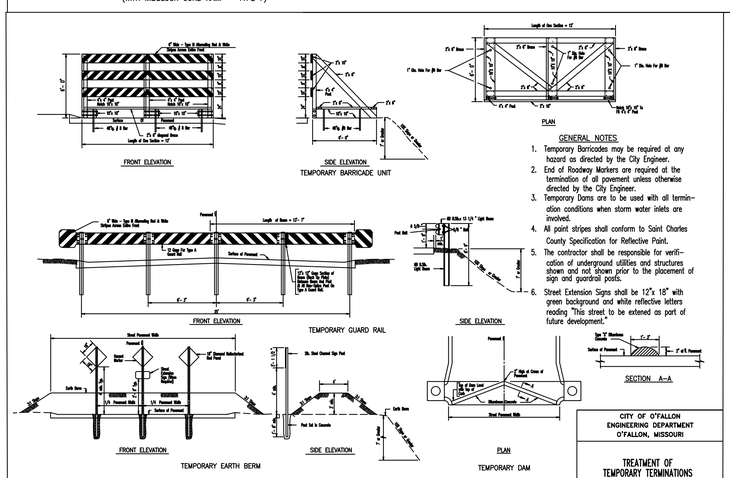

GENERAL NOTES

1. Temporary Barricades may be required at any hazard as directed by the City Engineer.
2. End of Roadway Markers are required at the termination of all pavement unless otherwise directed by the City Engineer.
3. Temporary Dams are to be used with all termination conditions when storm water inlets are involved.
4. All paint stripes shall conform to Saint Charles County Specification for Reflective Paint.
5. The contractor shall be responsible for verification of underground utilities and structures shown and not shown prior to the placement of sign and guardrail posts.
6. Street Extension Signs shall be 12"x 18" with green background and white reflective letters reading "This street to be extened as part of future development."

CITY OF O'FALLON
ENGINEERING DEPARTMENT
O'FALLON, MISSOURI

TREATMENT OF
TEMPORARY TERMINATIONS
OF ROADWAY PAVEMENT

PROJECT TITLE

Brookview

O'FALLON, MISSOURI

THE STERLING CO.
ENGINEERS & SURVEYORS
5055 Lewis Launtgarter Road
Lake Lewis, Missouri 63129
Ph 314-487-0440 Fax 314-487-8944
www.sterling-eng-sur.com
Corporate Certificate of Authority #001348

STATE OF MISSOURI
SEAN M. ACKLEY
NUMBER
PE-2009018679
PROFESSIONAL ENGINEER

Date: 01/11/18
SEAN ACKLEY
LICENSE # PE-2009018679
Civil Engineer

McBride Guthrie, LLC
16091 Swingley Ridge Road, Suite 300
Chesterfield, Missouri 63017
Ph. (636) 537-2000
Fax (636) 537-2546

PAVEMENT DETAILS

P+Z No.	17-005894
City No.	17-008288
Date:	01/11/18
Job No.	17-02-041

Page No.

13.2

IMP

"Final Plan" Approval Date: August 24, 2017