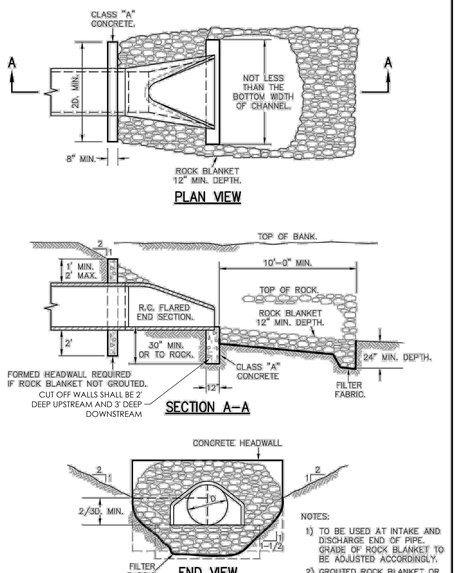

NOTES:
1) TO BE USED AT INTAKE AND DISCHARGE END OF PIPE. GRADE OF ROCK BLANKET TO BE ADJUSTED ACCORDINGLY.
2) GROUTED ROCK BLANKET OR CONC. HEADWALL REQUIRED.

FLARED END SECTION	METROPOLITAN ST. LOUIS SEWER DISTRICT *Standard Details of Sewer Construction*		
	Dr. WSH/SAM Ch. J.C.K.	2009	SHEET 61

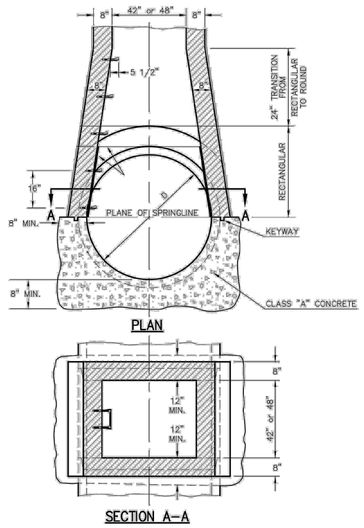

NOTES:
2) MANHOLE STEPS UNIFORMLY SPACED AT 16" C-C.
3) THE MINIMUM INSIDE DIAMETER FOR THE RISER SECTIONS SHALL BE 42" FOR ALL STORM SEWERS. THE MINIMUM INSIDE DIAMETER FOR SANITARY SEWERS IS 48 INCHES.

MANHOLE ON CONCRETE PIPE SEWERS 48" THRU 54" DIAMETER	METROPOLITAN ST. LOUIS SEWER DISTRICT *Standard Details of Sewer Construction*		
	Dr. WSH/SAM Ch. J.C.K.	2009	SHEET 13

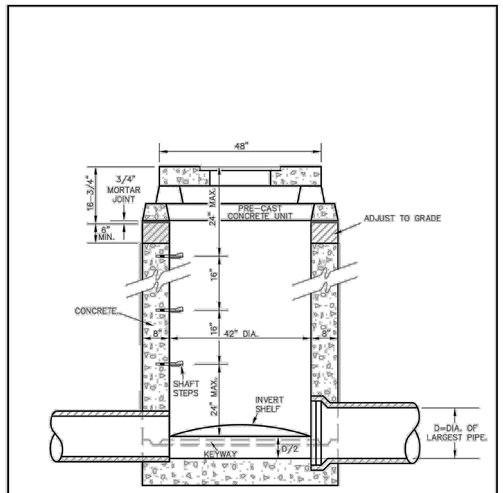

NOTE:
FOR SEWERS 27 INCH THRU 42 INCH SEE DETAIL SHEET 11 FOR BOTTOM SECTION.

AREA INLET MANHOLE (12" THRU 24")	METROPOLITAN ST. LOUIS SEWER DISTRICT *Standard Details of Sewer Construction*		
	Dr. RGW/SAM Ch. J.C.K.	2009	SHEET 29

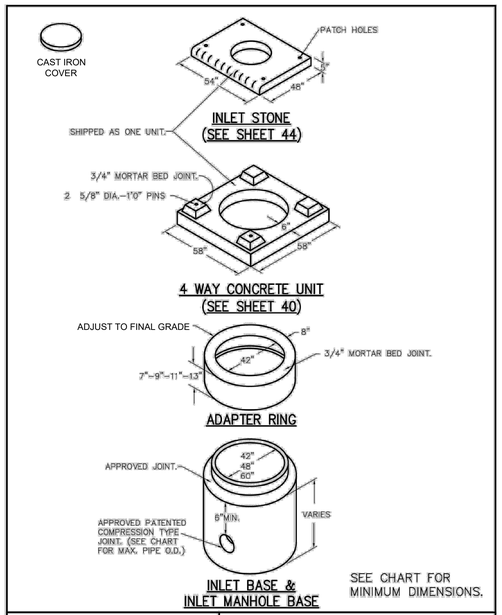

SEE CHART FOR MINIMUM DIMENSIONS.

AREA INLET PRECAST CONCRETE	METROPOLITAN ST. LOUIS SEWER DISTRICT *Standard Details of Sewer Construction*		
	Dr. JLG/SAM Ch. J.C.K.	2009	SHEET 34

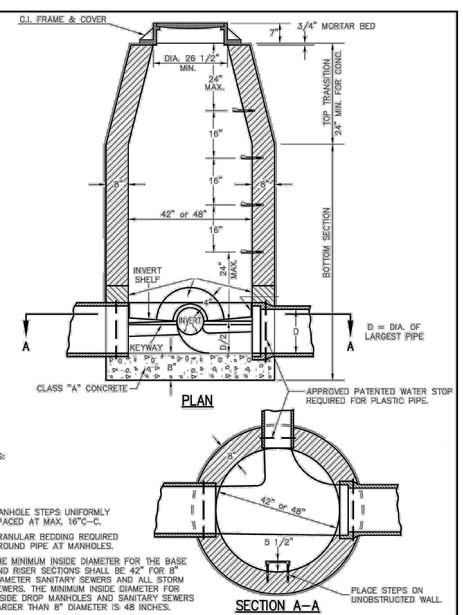

NOTES:
1)
2) MANHOLE STEPS UNIFORMLY SPACED AT MAX. 16"-C.
3) GRANULAR BEDDING REQUIRED AROUND PIPE AT MANHOLES.
4) THE MINIMUM INSIDE DIAMETER FOR THE BASE AND RISER SECTIONS SHALL BE 42" FOR 8" DIAMETER SANITARY SEWERS AND ALL STORM SEWERS. THE MINIMUM INSIDE DIAMETER FOR INSIDE DROP MANHOLES AND SANITARY SEWERS LARGER THAN 8" DIAMETER IS 48 INCHES.

LINE MANHOLE PIPE SEWERS 8"-24" DIA.	METROPOLITAN ST. LOUIS SEWER DISTRICT *Standard Details of Sewer Construction*		
	Dr. WSH/SAM Ch. J.C.K.	2009	SHEET 10 (REV)

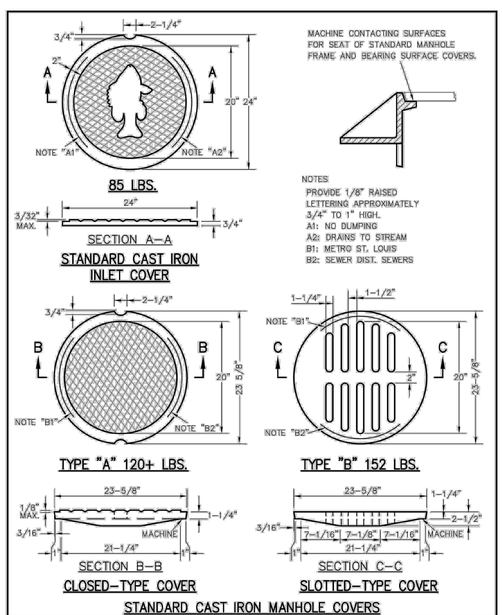

CAST IRON COVERS FOR MANHOLES AND INLETS	METROPOLITAN ST. LOUIS SEWER DISTRICT *Standard Details of Sewer Construction*		
	Dr. RGW/SAM Ch. J.C.K.	2009	SHEET 53

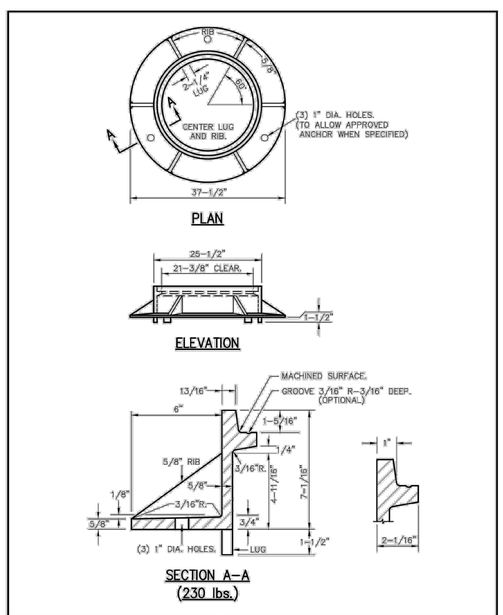

CAST IRON MANHOLE FRAME	METROPOLITAN ST. LOUIS SEWER DISTRICT *Standard Details of Sewer Construction*		
	Dr. DAB/SAM Ch. J.C.K.	2009	SHEET 52

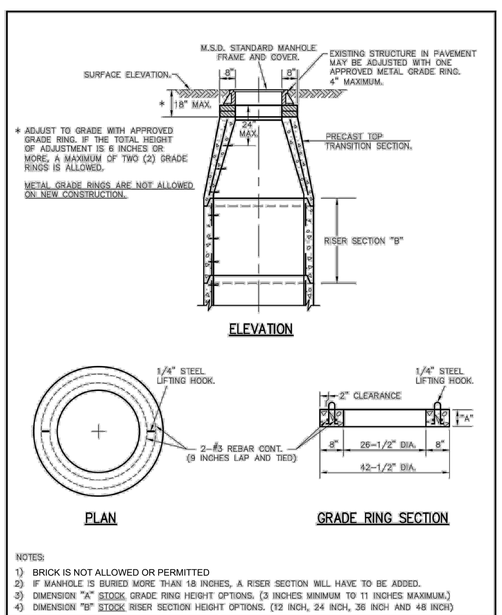

NOTES:
1) BRICK IS NOT ALLOWED OR PERMITTED
2) IF MANHOLE IS BURIED MORE THAN 18 INCHES, A RISER SECTION WILL HAVE TO BE ADDED.
3) DIMENSION "A" STOCK GRADE RING HEIGHT OPTIONS. (3 INCHES MINIMUM TO 11 INCHES MAXIMUM.)
4) DIMENSION "B" STOCK RISER SECTION HEIGHT OPTIONS. (12 INCH, 24 INCH, 36 INCH AND 48 INCH)

ADJUST TO GRADE	METROPOLITAN ST. LOUIS SEWER DISTRICT *Standard Details of Sewer Construction*		
	Dr. S.A.M. Ch. P.W.S.	2009	SHEET 23 (REV)

PREMIER DESIGN GROUP
100 MIDLAND PARK DRIVE
WENTZVILLE, MO 63385
MISSOURI CERTIFICATE OF AUTHORITY #: 2006000031
MISSOURI CERTIFICATE OF AUTHORITY #: C002007849

STATE OF MISSOURI
STEVEN MARION NUMBER PE2006007195
PROFESSIONAL ENGINEER
5/2/2023

ENGINEERS AUTHENTICATION
The responsibility for professional engineering liability on this project is hereby limited to the set of plans authenticated by the seal, signature, and date hereunder attached. Responsibility is disclaimed for all other engineering plans unless sealed and specifically excludes revisions after this date unless noted otherwise.
STEVEN D. MARION P.E.
PROFESSIONAL ENGINEER
PE 2006007195

Project
NOLES PROPERTIES LLC
BRYAN ROAD COMMERCIAL DEVELOPMENT
TBD BRYAN ROAD
O'FALLON, MO 63376
NOLES PROPERTIES LLC
11391 OLIVE BLVD
CREVE COEUR, MO 63141

Date 5/2/2023

#	Revision Date	Description of Change
1.	6/26/2023	REVISED PER CITY OF O'FALLON AND O'FALLON FIRE COMMENTS
2.	7/7/2023	REVISED PER CITY OF O'FALLON COMMENTS
3.	7/17/2023	REVISED PER CITY OF O'FALLON COMMENTS

Sheet Title
STORM SEWER DETAILS

Sheet Number
C-801

Project No.	2202920
Drawn By	P. HEITZ
Checked By	M. FOGARTY

ISSUED FOR CONSTRUCTION