ROUND PIPE				HORIZONTAL ELLIPTICAL PIPE			
INSIDE DIAMETER OF PIPE (INCHES)	"W" PAYLINE WIDTH OF TRENCH (INCHES)	"W" PAYLINE WIDTH OF TRENCH (FEET)	PAY-VOLUMES CU. FT. PER FT. CONCRETE ENCASEMENT	INSIDE DIAMETER OF PIPE (INCHES)	"W" PAYLINE WIDTH OF TRENCH (INCHES)	"W" PAYLINE WIDTH OF TRENCH (FEET)	PAY-VOLUMES CU. FT. PER FT. CONCRETE ENCASEMENT
4	30	2.50	3.28				
6	30	2.50	3.59				
8	30	2.50	3.87				
10	30	2.50	4.09				
12	30	2.50	4.25				
15	36	3.00	5.55				
18	36	3.00	5.77	14 x 23	41	3.42	5.94
21	39	3.25	6.61				
24	42	3.50	7.39	19 x30	49	4.08	7.68
27	45	3.75	8.18	22 x 34	53	4.42	8.61
30	49	4.08	9.30	24 x 38	58	4.83	9.70
33	53	4.42	10.53	27 x 42	62	5.17	10.71
36	56	4.67	11.43	29 x 45	66	5.50	11.72
39	DISCONTINUED			32 x 49	71	5.92	13.14
42	63	5.25	13.38	34 x 53	75	6.25	14.05
48	70	5.83	15.67	38 x 60	83	6.92	16.18
54	77	6.42	18.15	43 x 68	92	7.67	18.81
60	84	7.00	20.73	48 x 76	101	8.42	21.59
66	91	7.58	23.45	53 x 83	109	9.08	24.35
72	98	8.17	26.37	58 x 91	118	9.83	27.45
78	105	8.75	29.39	63 x 98	126	10.50	30.50
84	112	9.33	32.57	68 x 106	135	11.25	33.91
90	119	9.92	35.90	72 x 113	143	11.92	36.99
96	126	10.50	39.37	77 x 121	152	12.67	40.69
102	133	11.08	42.99	82 x 128	160	13.33	44.45
108	140	11.67	46.75	87 x 136	168	14.00	47.79
114	147	12.25	50.66	92 x 143	176	14.67	51.70
120	154	12.83	54.72	97 x 151	185	15.42	56.01
126	161	13.42	58.92				
132	168	14.00	63.27	106 x 166	202	16.83	64.48
144	182	15.17	72.40	116 x 180	218	18.17	73.59

Duckett Creek Sanitary District

PAYLINE WIDTHS OF TRENCH AND PAY-QUANTITIES OF CONCRETE

Own By: BSM | App By: KLA | Detail No. 1
Chf By: MDOB | Date: DEC. 2015

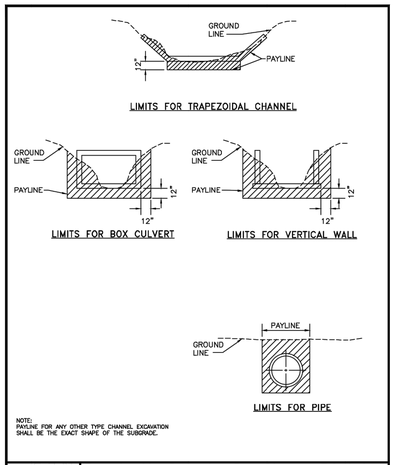

NOTE:
PAYLINE FOR ANY OTHER TYPE CHANNEL EXCAVATION SHALL BE THE EXACT SHAPE OF THE SUBGRADE.

Duckett Creek Sanitary District

PAYLINE LIMITS FOR EXCAVATION

Own By: BSM | App By: KLA | Detail No. 2
Chf By: MDOB | Date: DEC. 2015

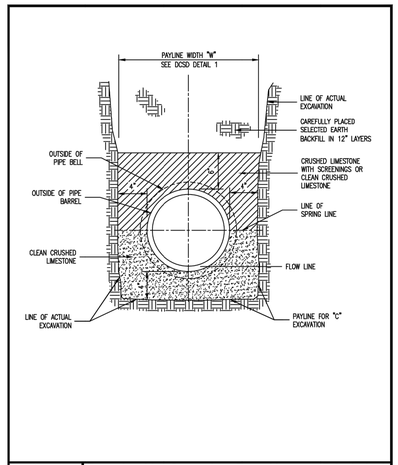

Duckett Creek Sanitary District

PIPE BEDDING CLASS "C" (FOR ALL EXCEPT REINFORCED CONCRETE PIPE)

Own By: BSM | App By: KA | Detail No. 3
Chf By: MDOB | Date: DEC. 2015

Installation Techniques - Link-Seal® Modular Seals

Online Installation Video
Visit www.linkseal.com

1. Center the pipe, cable or conduit in wall opening or casing. Make sure the pipe will be adequately supported on both ends. Link-Seal® modular seals are not intended to support the weight of the pipe.

2. Loosen rear pressure plate with nut just enough so links move freely. Connect both ends of belt around the pipe.

3. Check to be sure all bolt heads are facing the installer. Extra slack or sag is normal. Do not remove links if extra slack exists. Note: On smaller diameter pipe, links may need to be stretched.

4. Slide belt assembly into annular space. For larger size belts, start inserting Link-Seal modular seal assembly at the 6 O'Clock position and work both sides up toward the 12 O'-Clock position in the annular space.

5. LS-200 thru. LS-315 Using a hand socket allen head or off-set wrench ONLY, start at 12 O' Clock. Do not tighten any bolt more than 4 turns at a time. Continue in a clockwise manner until links have been uniformly compressed. (Approx. 2 or 3 rotations)

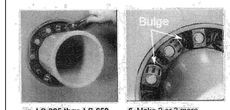

5a. LS-325 thru. LS-650 Using a hand socket or off-set wrench ONLY, start at 12 O' Clock. Do not tighten any bolt more than 4 turns at a time. Continue in a clockwise manner until links have been uniformly compressed. (Approx. 2 or 3 rotations)

6. Make 2 or 3 more passes at 4 turns per bolt MAXIMUM, tightening all bolts clockwise until all sealing elements "bulge" around all pressure plates. On type 316 stainless steel bolts, hand tighten ONLY without power tool.

7. If the seal doesn't appear to be correct using the instructions provided, **Call PSI at 800-423-2410.**

Link-Seal® Model	Tool Size/ Type Req.
LS-200, LS-275	4mm, Allen
LS-300, LS-315	6mm, Allen
LS-325, LS-340, LS-360	13mm, Hex
LS-400, LS-410, LS-425, LS-475	17mm, Hex
LS-500, LS-525, LS-575	19mm, Hex
LS-600	30mm, Hex
LS-650	19mm, Hex

Installation Notes: The Link-Seal® modular seal bolt heads are usually recessed below the wall opening or the edge of casing pipe and therefore a socket or offset wrench must be used. **Hand Tools:** Review provided chart above. (Tools not provided.) Tools can be purchased from hardware store, auto parts store, or home improvement store.

Always Wear Safety Equipment When Using Link-Seal® Modular Seals!

Link-Seal® Modular Seal - Do's

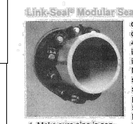

1. Make sure pipe is centered.
2. Install the belt with the pressure plates evenly spaced.
3. Install the exact number of links indicated in sizing charts.
4. Check to make sure pipe is supported properly during backfill operations. Note: Link-Seal modular seals are not intended to support the weight of the pipe.
5. Make sure seal assembly and pipe surfaces are free from dirt.
6. For tight fits, use non-polluting liquid detergent to assist installation.

Link-Seal® Modular Seal - Don'ts

1. Don't Install the belt with the pressure plates aimed in irregular directions. (Staggered)
2. Don't Install Link-Seal® modular seals where weld-beads or other irregular surfaces exist without consideration of the sealing requirements.
3. Don't torque each bolt completely before moving on to the next.
4. Don't use high speed power tools (450 rpm or more)
5. Do not use power tools on Link-Seal modular seal 316 stainless steel bolts.
6. Don't use grease installing Link-Seal modular seals.

If the seal doesn't appear to be correct using the techniques provided, **Call PSI at 713-747-6943 or 800-423-2410.**

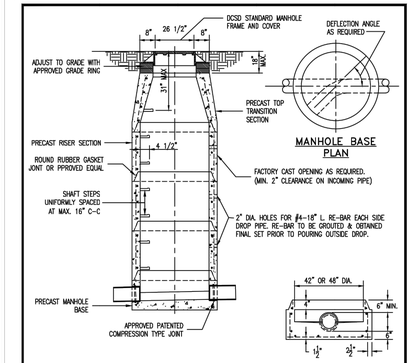

MANHOLE BASE PLAN

BASE SECTION

SECTION OF MANHOLE		DIMENSION
TOP TRANSITION	UPPER	26 1/2" DIA.
	LOWER	42" DIA.
BOTTOM SECTION	8" DIA. PIPE	42" DIA.
BOTTOM SECTION	10" THRU 36" DIA. PIPE	48" DIA.
BOTTOM SECTION	42" DIA. PIPE	60" DIA.

NOTES:
1. ALL INVERTS SHALL HAVE POSITIVE DRAINAGE THROUGH MANHOLE.
2. BRICK SHALL NOT BE USED ON MANHOLES.

SEE A.S.T.M. C-478 FOR MINIMUM STEEL REQUIREMENTS.

Duckett Creek Sanitary District

PRECAST CONCRETE MANHOLE FOR SEWERS 8" THROUGH 18"

Own By: BSM | App By: KLA | Detail No. 7
Chf By: MDOB | Date: DEC. 2015

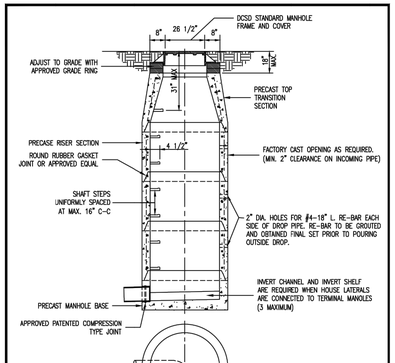

SECTION OF MANHOLE		DIMENSION
TOP TRANSITION	UPPER	26 1/2" DIA.
	LOWER	42" DIA.
BOTTOM SECTION	8" DIA. PIPE	42" DIA.
BOTTOM SECTION	10" THRU 36" DIA. PIPE	48" DIA.
BOTTOM SECTION	42" DIA. PIPE	60" DIA.

NOTES:
1. ALL INVERTS SHALL HAVE POSITIVE DRAINAGE THROUGH MANHOLE.
2. BRICK SHALL NOT BE USED ON MANHOLES.

SEE A.S.T.M. C-478 FOR MINIMUM STEEL REQUIREMENTS.

Duckett Creek Sanitary District

TERMINAL MANHOLE FOR SEWERS 8" THROUGH 18"

Own By: BSM | App By: KLA | Detail No. 8
Chf By: MDOB | Date: DEC. 2015

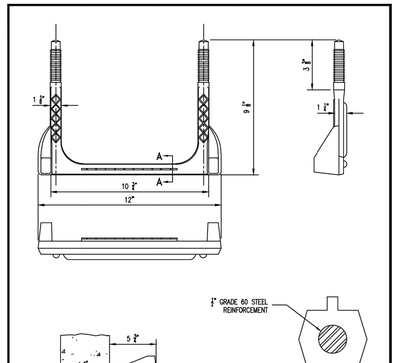

Duckett Creek Sanitary District

MANHOLE STEP FOR PRECAST MANHOLE

Own By: BSM | App By: KA | Detail No. 18
Chf By: MDOB | Date: DEC. 2015

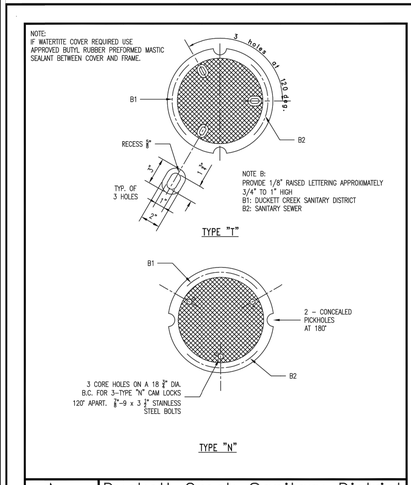

Duckett Creek Sanitary District

CAST IRON MANHOLE COVERS (LOCK TYPE)

Own By: BSM | App By: KLA | Detail No. 14
Chf By: MDOB | Date: DEC. 2015

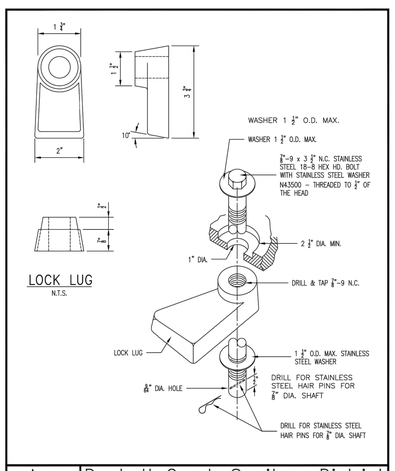

LOCK LUG
N.T.S.

Duckett Creek Sanitary District

LOCKING DEVICE FOR TYPE "N" LOCK TYPEMAN HOLE COVER

Own By: BSM | App By: KLA | Detail No. 16
Chf By: MDOB | Date: DEC. 2015

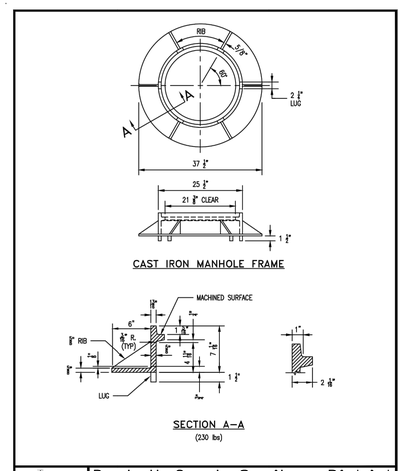

Duckett Creek Sanitary District

CAST IRON MANHOLE FRAME

Own By: BSM | App By: KLA | Detail No. 11
Chf By: MDOB | Date: DEC. 2015

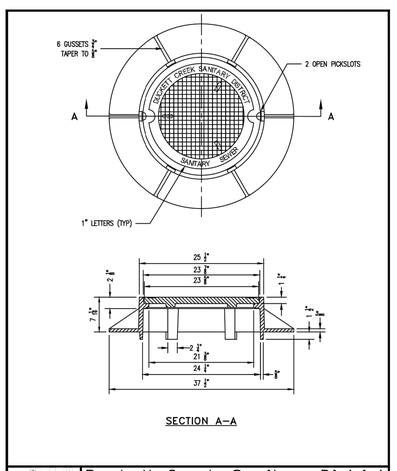

Duckett Creek Sanitary District

MANHOLE FRAME AND COVER

Own By: BSM | App By: KLA | Detail No. 12
Chf By: MDOB | Date: DEC. 2015

DUCKETT CREEK SANITARY DISTRICT CONSTRUCTION NOTES

1. Underground utilities have been plotted from available information and therefore location shall be considered approximate only. The verification of the location of all underground utilities, either shown or not shown on these plans, shall be the responsibility of the contractor and shall be located prior to any grading or construction of improvements.
2. Gas, water and other underground utilities shall not conflict with the depth or horizontal location of existing or proposed sanitary and storm sewers, including house laterals.
3. All existing site improvements disturbed, damaged or destroyed shall be repaired or replaced to closely match preconstruction conditions.
4. All fill including places under proposed storm and sanitary sewer lines and paved areas including trench backfills within and off the road right-of-way shall be compacted to 90 percent of maximum density as determined by the "Modified AASHTO T-180 Compaction Test (ASTM D1557)". All tests shall be verified by a Soils Engineer concurrent with grading and backfilling operations. The compacted fill shall be free of rutting and shall be non-yielding and non-pumping during proofrolling and compaction.
5. The contractor shall prevent all storm, surface water, mud and construction debris from entering the existing sanitary sewer system. The contractor will be required to install a brick bulkhead on the downstream side of the first new manhole constructed when connecting into existing sewers.
6. All sanitary sewer flowlines and tops built without elevations furnished by the engineer will be the responsibility of the sewer contractor.
7. It is the responsibility of the contractor to adjust all sanitary sewer manholes (that are affected by the development) to finish grade.
8. Easements shall be provided for all sanitary sewers, storm sewers and all utilities on the record plat.
9. All sanitary sewer construction and materials shall conform to the current construction standards of the Duckett Creek Sanitary District.
10. The Duckett Creek Sanitary District shall be notified at least 48 hours prior to construction for coordination of inspection.
11. All sanitary sewer building connections shall be designed so that the minimum vertical distance from the low point of the basement to the flowline of a sanitary sewer at the corresponding building connection shall not be less than the diameter of the pipe plus the vertical distance of 2½ feet.
12. All sanitary sewer manholes shall be watertight in accordance with Missouri Dept. of Natural Resources specification 10 CSR 20-8.120(6)(F) 1.
13. All PVC sanitary sewer pipe shall conform to the requirements of ASTM D-3034 Standard Specification for PSM Polyvinyl Chloride Sewer Pipe, SDR-35 or equal, with "clean" 1/2 inch to 1 inch granular stone bedding uniformly graded. This bedding shall extend from 4 inches below the pipe to springline of pipe. Immediate backfill over pipe shall consist of same size "clean" or "minus" stone from springline of pipe to 6 inches above the top of pipe. Final backfill material shall be of suitable material removed from excavation except as other material is specified. Debris, frozen material, large rocks or stones, or other unstable materials shall not be used within 2 feet from top of pipe.
14. All sanitary and storm sewer trench backfills shall be water jetted. Granular backfill will be used under pavement areas.
15. All pipes shall have positive drainage through manholes. Flat invert structures not allowed.
16. Epoxy Coating shall be used on all sanitary sewer manholes that receive pressurized mains.
17. All creek crossings shall be lined with rip-rap as directed by District inspectors.
18. Brick shall not be used on sanitary sewer manholes.
19. Existing sanitary sewer service shall not be interrupted.
20. Maintain access to existing residential driveways and streets.
21. Pre-manufactured adapters shall be used at all PVC to DIP connections. Rubber boot / Mission-type couplings will not be allowed.
22. Any permits, licenses, easements, or approvals required to work on public or private properties or roadways are the responsibility of the developer.
23. 'Type N' Lock-Type Cover and Locking Device (Lock-Lug) shall be used where lock-type covers are required.
24. All sanitary sewer system work shall be conducted under the inspection of a representative of the District. All work may not require inspection but the District's representative may designate specific areas that must be inspected before the work is backfilled. All testing must be witnessed by the District's Inspector and the Contractor shall furnish all testing equipment as approved by the District. Testing shall include:
    - A mandrel test of all gravity sewers using a mandrel with a diameter that has a diameter 95% of the inside pipe diameter. If the mandrel test fails on any section of pipe, that section of pipe shall be uncovered and replaced. No expansion devices will be allowed to be used to "force" the pipe that is deformed back into round. Any string lines used in mandrel testing shall be removed after testing is completed. Deflection testing cannot be conducted prior to 30 days after final backfill.
    - An air pressure test of all gravity sewers to a pressure of 5 PSI with no observed drop in pressure during a test period of 5 minutes.
    - A vacuum test of all manholes for a period of 1 minute and the vacuum shall be 10" of mercury and may not drop below 9" of mercury at the end of the 1 minute test.

NO	REVISION DESCRIPTION	DATE

DEVELOPER/OWNER:
40DD SPORTS, LLC
1 ASPEN CIRCLE DRIVE
INNSBROOK, MO 63390

THE PROFESSIONAL WHOSE SIGNATURE AND PERSONAL SEAL APPEAR HEREON ASSUMES RESPONSIBILITY ONLY FOR WHAT APPEARS ON THIS PAGE, AND DISCLAIMS ANY RESPONSIBILITY FOR ALL OTHER DOCUMENTS OR INSTRUMENTS INCLUDING, BUT NOT LIMITED TO, SPECIFICATIONS, ESTIMATES, REPORTS, OR OTHER DOCUMENTS OR INSTRUMENTS NOT SEALED BY THE UNDERSIGNED PROFESSIONAL RELATING TO, OR INTENDED TO BE USED FOR, ANY PART OR PARTS OF THE PROJECT TO WHICH THIS PAGE REFERS.

CIVIL ENGINEERS
CORPORATE ENGINEERING CERTIFICATE #001163
MATTHEW G. STEUBER
NO.PE-2010017899
DATE: 05/19/2021

STATE OF MISSOURI
MATTHEW G. STEUBER
NUMBER PE-2010017899
PROFESSIONAL ENGINEER

CALEDONIA CENTER PHASE 2
O'FALLON, MO

SANITARY SEWER DETAILS

cole®
+ ST. CHARLES
1530 S. Fifth Street
Suite 307
St. Charles, MO 63303
636.978.7508 tel
www.colestl.com
CIVIL ENGINEERING / SURVEYING / PLANNING / LANDSCAPE ARCHITECTURE
Cole & Associates, Inc. is a Missouri Corporation d.b.a. Cole Design Group, Inc. in Arizona & Texas. Licensed registrants in all 50 states

DESIGN/CALC BY	MGS
DRAWN BY	MGS
CHECKED BY	EWM
DRAWING SCALE	AS SHOWN
DATE	05/19/2021
Job Number	21-0017
Sheet Number	C10.1

USER: Matt Steuber TAB: C10.1 SANITARY SEWER DETAILS
DATE: May 19, 2021 - 12:08:03 PM
DRAWING: S:\CADD\Jobs2021\21-0017\CADD\C-Plan\PlanSheets\0_JPLAN_DETAIL_21-0017.dwg