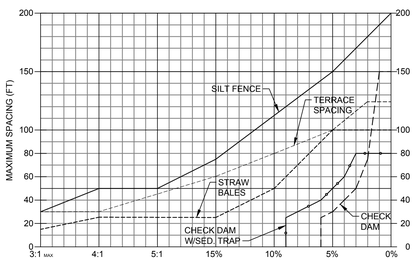

DESIGN CRITERIA

1. SILT FENCE FOR SHEET FLOW SHALL HAVE A MAXIMUM DRAINAGE AREA OF 1/4 ACRE PER 100 LF.
2. STRAW BALE BARRIERS FOR SHEET FLOW SHALL HAVE A MAXIMUM DRAINAGE AREA OF 1/4 ACRE PER 100 LF.
3. REFER TO INDIVIDUAL ESC FIGURE FOR INSTALLATION.
4. TERRACING INCLUDES LOGS, WATTLES & FILTER SOCKS.

CITY OF O'FALLON ENGINEERING DEPARTMENT O'FALLON, MISSOURI

SPACING CHART FOR ESC DEVICES

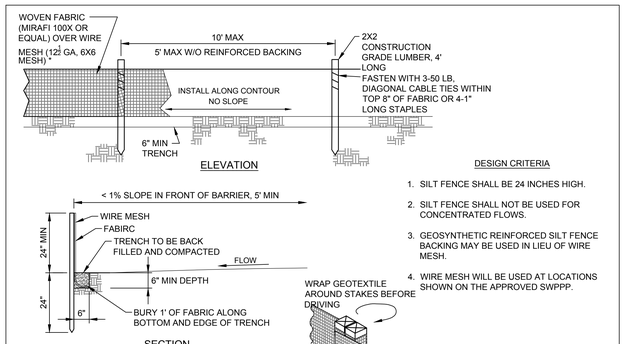

NOTE: IF FABRIC IS INSTALLED BY EQUIPMENT DESIGNED TO SLICE INTO THE GROUND, THE TRENCH IS NOT REQ'D.

DESIGN CRITERIA

1. SILT FENCE SHALL BE 24 INCHES HIGH.
2. SILT FENCE SHALL NOT BE USED FOR CONCENTRATED FLOWS.
3. GEOSYNTHETIC REINFORCED SILT FENCE BACKING MAY BE USED IN LIEU OF WIRE MESH.
4. WIRE MESH WILL BE USED AT LOCATIONS SHOWN ON THE APPROVED SWPPP.

CITY OF O'FALLON ENGINEERING DEPARTMENT O'FALLON, MISSOURI

SILT FENCE INSTALLATION SHEET FLOW (ONLY)

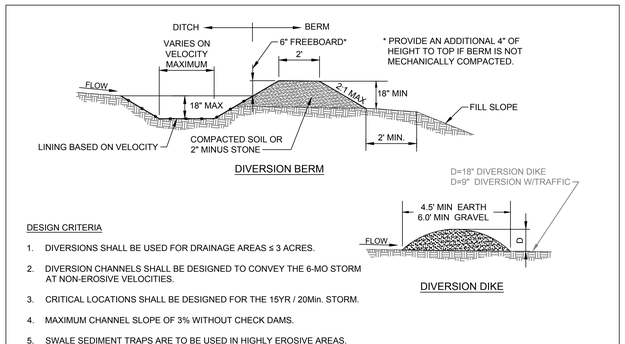

DESIGN CRITERIA

1. DIVERSIONS SHALL BE USED FOR DRAINAGE AREAS ≤ 3 ACRES.
2. DIVERSION CHANNELS SHALL BE DESIGNED TO CONVEY THE 6-MO STORM AT NON-EROSIVE VELOCITIES.
3. CRITICAL LOCATIONS SHALL BE DESIGNED FOR THE 15YR / 20Min. STORM.
4. MAXIMUM CHANNEL SLOPE OF 3% WITHOUT CHECK DAMS.
5. SWALE SEDIMENT TRAPS ARE TO BE USED IN HIGHLY EROSIVE AREAS.
6. CHANNELS SHALL BE PROTECTED USING APPROPRIATE CHANNEL LINERS.
7. CHANNEL OUTLETS MUST BE STABILIZED.
8. STORM SEWERS MAY BE USED IN LIEU OF OPEN CHANNELS.

CITY OF O'FALLON ENGINEERING DEPARTMENT O'FALLON, MISSOURI

DIVERSION BERMS + DIKES

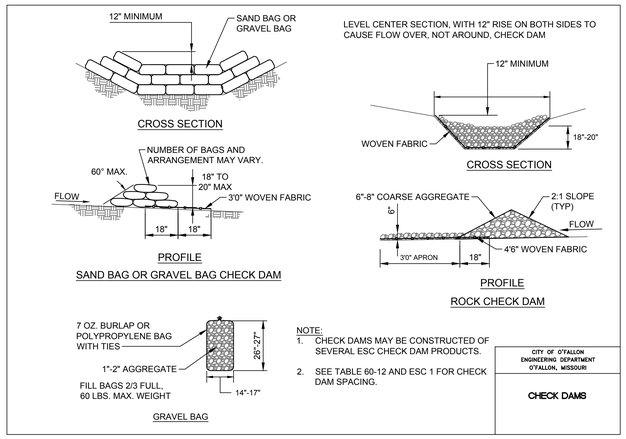

NOTE:

1. CHECK DAMS MAY BE CONSTRUCTED OF SEVERAL ESC CHECK DAM PRODUCTS.
2. SEE TABLE 60-12 AND ESC 1 FOR CHECK DAM SPACING.

CITY OF O'FALLON ENGINEERING DEPARTMENT O'FALLON, MISSOURI

CHECK DAMS

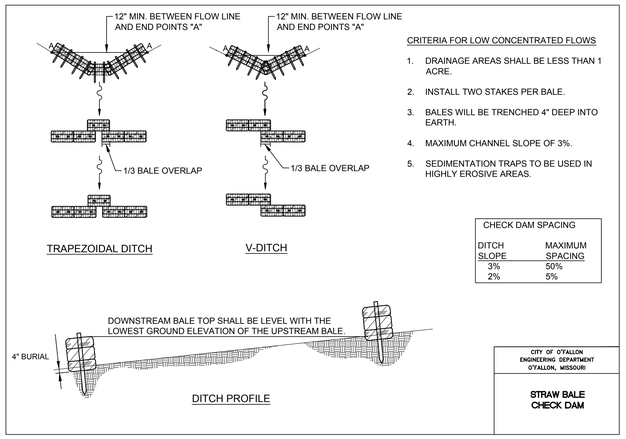

CRITERIA FOR LOW CONCENTRATED FLOWS

1. DRAINAGE AREAS SHALL BE LESS THAN 1 ACRE.
2. INSTALL TWO STAKES PER BALE.
3. BALES WILL BE TRENCHED 4" DEEP INTO EARTH.
4. MAXIMUM CHANNEL SLOPE OF 3%.
5. SEDIMENTATION TRAPS TO BE USED IN HIGHLY EROSIVE AREAS.

CHECK DAM SPACING	
DITCH SLOPE	MAXIMUM SPACING
3%	50%
2%	5%

CITY OF O'FALLON ENGINEERING DEPARTMENT O'FALLON, MISSOURI

STRAW BALE CHECK DAM

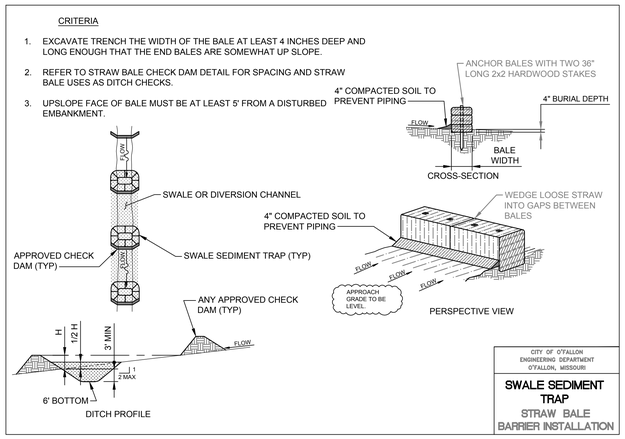

CITY OF O'FALLON ENGINEERING DEPARTMENT O'FALLON, MISSOURI

SWALE SEDIMENT TRAP
STRAW BALE BARRIER INSTALLATION

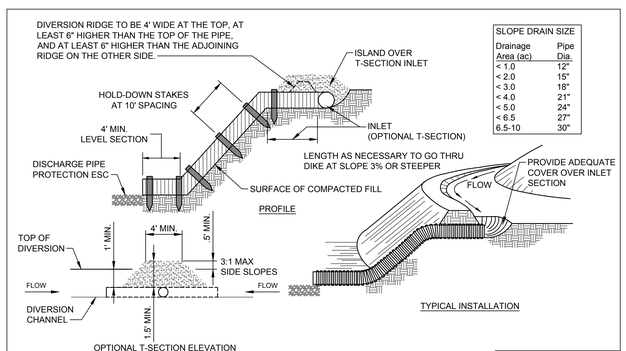

SLOPE DRAIN SIZE	
Drainage Area (ac)	Pipe Dia
< 1.0	12"
< 2.0	15"
< 3.0	18"
< 4.0	21"
< 5.0	24"
< 6.5	27"
6.5-10	30"

NOTE:

1. PIPE CAN BE CMP, PVC, FLEXIBLE TUBING, OR SIMILAR.
2. THIS METHOD MUST BE USED IN CONJUNCTION WITH OTHER ESC DEVICES. THIS IS NOT A STAND ALONE CONTROL DEVICE.

CITY OF O'FALLON ENGINEERING DEPARTMENT O'FALLON, MISSOURI

TEMPORARY SLOPE DRAIN

7 CITY OF OFALLON EROSION CONTROL DETAILS
SCALE: N.T.S.

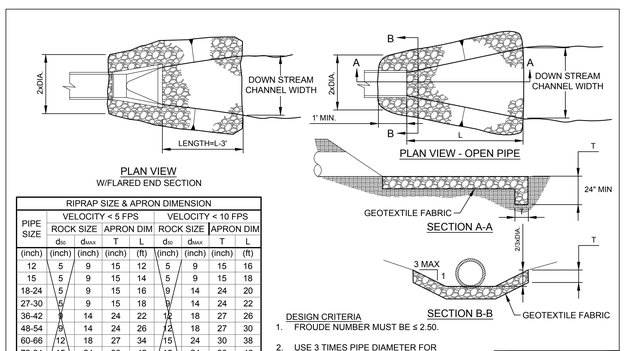

RIPRAP SIZE & APRON DIMENSION								
PIPE SIZE	VELOCITY < 5 FPS				VELOCITY < 10 FPS			
	ROCK SIZE		APRON DIM		ROCK SIZE		APRON DIM	
	d_{50}	d_{MAX}	T	L	d_{50}	d_{MAX}	T	L
(inch)	(inch)	(inch)	(inch)	(ft)	(inch)	(inch)	(inch)	(ft)
12	5	9	15	12	5	9	15	16
15	5	9	15	14	5	9	15	18
18-24	5	9	15	16	9	14	24	20
27-30	5	9	15	18	9	14	24	22
36-42	9	14	24	22	12	18	27	26
48-54	9	14	24	26	12	18	27	30
60-66	12	18	27	34	15	24	30	38
72-84	15	24	30	42	15	24	30	46
96	18	27	30	50	18	27	30	54

d_{50} - NOMINAL DIAMETER
d_{MAX} - MAXIMUM DIAMETER
T - THICKNESS
L - LENGTH

DESIGN CRITERIA

1. FROUDE NUMBER MUST BE ≤ 2.50.
2. USE 3 TIMES PIPE DIAMETER FOR DOWNSTREAM CHANNEL WIDTH IF THERE IS NO DEFINED CHANNEL.
3. BANK PROTECTION HEIGHT TO BE 2/3 TIMES PIPE DIAMETER.
4.
5. ROCK SLOPES SHALL BE NO STEEPER THAN 3:1.

CITY OF O'FALLON ENGINEERING DEPARTMENT O'FALLON, MISSOURI

TEMPORARY OUTLET PIPE DISCHARGE PROTECTION

CITY OF O'FALLON STANDARD COMMERCIAL NOTES AND DETAILS - JUNE 2010

NORTH AMERICAN GREEN
EROSION CONTROL *Products Guaranteed* SOLUTIONS
14649 HIGHWAY 41 NORTH
EVANSVILLE, IN 47725
800-772-2040
www.nagreen.com

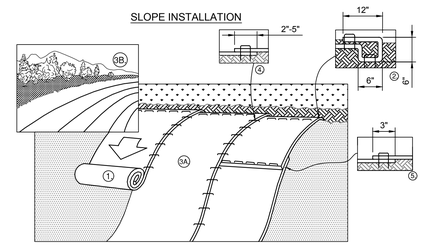

1. PREPARE SOIL BEFORE INSTALLING ROLLED EROSION CONTROL PRODUCTS (RECP's), INCLUDING ANY NECESSARY APPLICATION OF LIME, FERTILIZER, AND SEED. NOTE: WHEN USING CELL-O-SEED DO NOT SEED PREPARED AREA. CELL-O-SEED MUST BE INSTALLED WITH PAPER SIDE DOWN.
2. BEGIN AT THE TOP OF THE SLOPE BY ANCHORING THE RECP's IN A 6" (15 CM) DEEP X 6" (15 CM) WIDE TRENCH WITH APPROXIMATELY 12" (30cm) OF RECP's EXTENDED BEYOND THE UP-SLOPE PORTION OF THE TRENCH. ANCHOR THE RECP's WITH A ROW OF STAPLES/STAKES APPROXIMATELY 12" (30 CM) APART IN THE BOTTOM OF THE TRENCH. BACKFILL AND COMPACT THE TRENCH AFTER STAPLING. APPLY SEED TO COMPACTED SOIL AND FOLD REMAINING 12" (30 CM) PORTION OF RECP's BACK OVER SEED AND COMPACTED SOIL. SECURE RECP's OVER COMPACTED SOIL WITH A ROW OF STAPLES/STAKES SPACED APPROXIMATELY 12" (30 CM) APART ACROSS THE WIDTH OF THE RECP's.
3. ROLL THE RECP's (A.) DOWN OR (B.) HORIZONTALLY ACROSS THE SLOPE. RECP's WILL UNROLL WITH APPROPRIATE SIDE AGAINST THE SOIL SURFACE. ALL RECP's MUST BE SECURELY FASTENED TO SOIL SURFACE BY PLACING STAPLES/STAKES IN APPROPRIATE LOCATIONS AS SHOWN IN THE STAPLE PATTERN GUIDE. WHEN USING THE DOT SYSTEM*, STAPLES/STAKES SHOULD BE PLACED THROUGH EACH OF THE COLORED DOTS CORRESPONDING TO THE APPROPRIATE STAPLE PATTERN.
4. THE EDGES OF PARALLEL RECP's MUST BE STAPLED WITH APPROXIMATELY 2" - 5" (5 CM - 12.5 CM) OVERLAP DEPENDING ON RECP's TYPE.
5. CONSECUTIVE RECP's SPLICED DOWN THE SLOPE MUST BE PLACED END OVER END (SHINGLE STYLE) WITH AN APPROXIMATE 3" (7.5 CM) OVERLAP. STAPLE THROUGH OVERLAPPED AREA, APPROXIMATELY 12" (30 CM) APART ACROSS ENTIRE RECP's WIDTH. NOTE: *IN LOOSE SOIL CONDITIONS, THE USE OF STAPLE OR STAKE LENGTHS GREATER THAN 6" (15 CM) MAY BE NECESSARY TO PROPERLY SECURE THE RECP's.

9 PROJECT SPECIFIC EROSION CONTROL MAT, SLOPE INSTALLATION
SCALE: N.T.S.

sfs architecture
2100 Central St. Suite 31 Kansas City, MO 64108
816.474.1397 / 816.421.9024 www.sfsarch.com

KdG
Kuhlmann design Group, Inc.
66 Progress Parkway - St. Louis, Missouri 63043
t: 314.434.8898 - f: 314.434.8280 - kdginc.com

STATE OF MISSOURI
ANTHONY JAMES GIRONDO III
PE-2002031067
PROFESSIONAL ENGINEER
8/14/17

CIVIC PARK IMPROVEMENTS

O'Fallon Parks and Rec
Civic Park, O'Fallon, Missouri

MARK	DATE	DESCRIPTION

SFS PROJECT NO: 16962
ISSUED FOR: CONSTRUCTION DOCUMENTS
ISSUE DATE: 07/27/2017
© 2017 SFS ARCHITECTURE

SWPPP DETAILS

C5-05

K:\OFALLON MO\M0160194 SFS OFALLON CIVIC PARK\08 CADD\07 CIVIL\SHEETS\SA1_C5-05 - C5-06 - SWPPP DETAILS.DWG
© 2017 1:47:53 PM