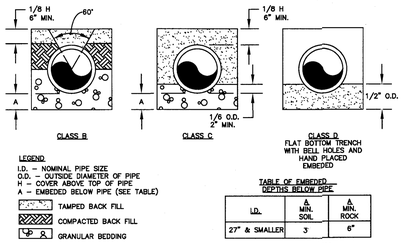

LEGEND:
I.D. – NOMINAL PIPE SIZE
O.D. – OUTSIDE DIAMETER OF PIPE
H – COVER ABOVE TOP OF PIPE
A – EMBEDED BELOW PIPE (SEE TABLE)

TAMPED BACK FILL
COMPACTED BACK FILL
GRANULAR BEDDING

TABLE OF EMBEDED DEPTHS BELOW PIPE

I.D.	A MIN. SOIL	A MIN. ROCK
27" & SMALLER	3'	6"

GRANULAR BEDDING SHALL BE CRUSHED ROCK OR PEA GRAVEL WITH NOT LESS THAN 95% PASSING 1/2" (95% PASSING 3/4" FOR 30" AND LARGER PIPE) AND NOT LESS THAN 95% RETAINED ON A #4, TO BE PLACED IN NOT MORE THAN 6" LAYERS AND COMPACTED BY SLICING WITH A SHOVEL OR VIBRATING.

COMPACTED BACK FILL SHALL BE FINELY DIVIDED JOB EXCAVATED MATERIAL FREE FROM DEBRIS, ORGANIC MATERIAL AND STONES, PLACED IN UNIFORM LAYERS NOT MORE THAN 6" THICK, COMPACTED TO 95% MAXIMUM DENSITY AS DETERMINED BY A.S.T.M. D698, OR GRADED AGGREGATE. GRANULAR BACK FILL MATERIAL MAY BE SUBSTITUTED FOR ALL OR PART OF COMPACTED BACK FILL.

TAMPED BACK FILL SHALL BE FINELY DIVIDED JOB EXCAVATED MATERIAL FREE FROM DEBRIS, ORGANIC MATERIAL AND STONES, HAND PLACED IN UNIFORM LAYERS NOT MORE THAN 6" THICK AND TAMPED AROUND CONDUIT PIPE. GRANULAR BACK FILL MATERIAL MAY BE SUBSTITUTED FOR ALL OR PART OF TAMPED BACK FILL.

TRENCH BACK FILL SHALL BE AS REQUIRED IN THE "LAYING AND BACK FILL" SECTION OF THE DETAILED SPECIFICATIONS.

EMBEDED THE TYPE OF EMBEDED TO BE USED SHALL BE AS SPECIFIED IN THE PLANS AND SPECIFICATIONS.

TRACER WIRE REQUIRED ON ALL WATER MAINS

WATER MAIN EMBEDED

NOT TO SCALE

CITY OF O'FALLON
ENGINEERING DEPARTMENT
O'FALLON, MISSOURI

WATER MAIN EMBEDED

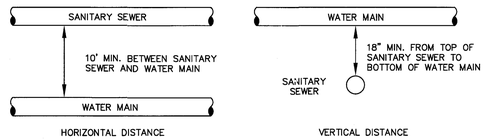

TYPICAL WATER AND SEWER SEPARATION

NOT TO SCALE

CITY OF O'FALLON
ENGINEERING DEPARTMENT
O'FALLON, MISSOURI

WATER AND SEWER SEPARATION DETAIL

ISSUE REMARKS/DATE

1	3-21-17 INITIAL SUBMITTAL
2	6-6-17 REVISED PER CITY COMMENTS
3	7-20-17 REVISED PER CITY COMMENTS
4	8-7-17 APPROVAL

Note: Other connections such as anchor coupling are allowable with additional details and approval.

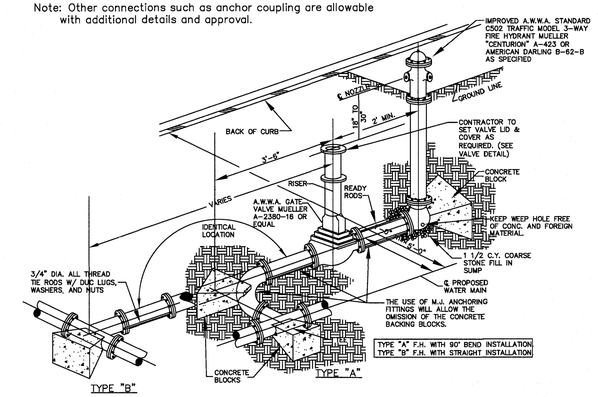

PROVIDE TRACER WIRE FROM MAIN TO VALVE

FIRE HYDRANT DETAIL

NOT TO SCALE

CITY OF O'FALLON
ENGINEERING DEPARTMENT
O'FALLON, MISSOURI

FIRE HYDRANT DETAILS

PROJECT TITLE

COBBLESTONE CROSSING

O'FALLON, MISSOURI

THE STERLING CO.
ENGINEERS & SURVEYORS
5055 New Baumgartner Road
St. Louis, Missouri 63123
Ph 314-487-9400 Fax 314-487-8944
www.sterling-eng-sur.com
Corporate Certificate of Authority #001348

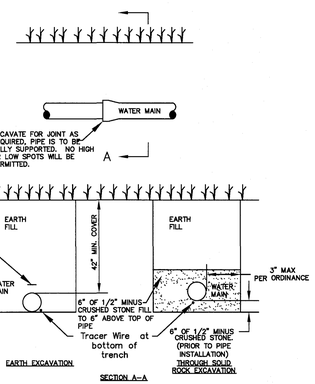

TYPICAL WATER MAIN INSTALLATION DETAILS

NOT TO SCALE

CITY OF O'FALLON
ENGINEERING DEPARTMENT
O'FALLON, MISSOURI

WATER MAIN INSTALLATION DETAIL

Ductile Iron Pipe installation shall follow the Ductile Iron Research Association (DIPRA) guide line.

The Installation of PVC Pipe shall follow the Uni–Bell PVC Pipe Association Handbook of PVC Design and Construction.

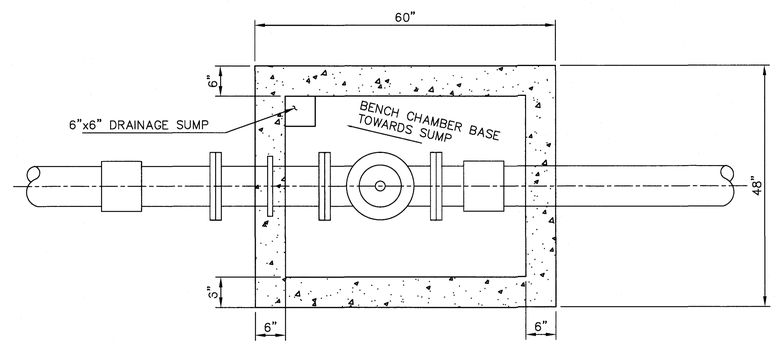

8" PRESSURE REDUCING VALVE CHAMBER & PIPING – PLAN

(NTS)

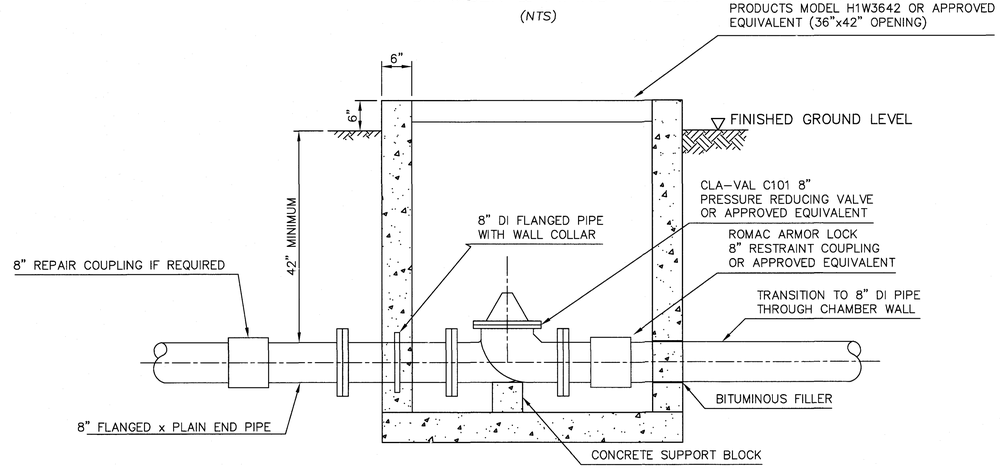

8" PRESSURE REDUCING VALVE CHAMBER & PIPING – ELEVATION

(NTS)

The Professional Engineer's seal and signature affixed to this document indicates his responsibility for the work shown on this sheet. No drawing, instruments or other documents not exhibiting his seal and signature shall be considered prepared by this engineer, and the engineer expressly disclaims any and all responsibility for such plans, drawings or documents not exhibiting his seal and signature.

STATE OF MISSOURI
MICHAEL G. BOERDING
NUMBER 28643
PROFESSIONAL ENGINEER

Date: 8/7/2017
Michael G. Boerding
License No. MO E-28643
Civil Engineer

McBRIDE HYLAND GREEN, LLC
16091 SWINGLEY RIDGE ROAD, SUITE 300
CHESTERFIELD, MISSOURI 63017
Ph. 636-537-2000
Fax 636-537-2546
www.mcbridehomes.com

WATER MAIN DETAILS

P+Z No.	29-16.01
City No.	
Date:	Aug. 7, 2017
Job No.	16-08-239

Page No.

DTL-6

IMP

City of O'Fallon Standard Subdivision Notes and Details – June 2010

"FINAL PLAN" Approval Date: January 26, 2017

Drawing name: V:\16\08239 Dames Park\Drawings\Engineering\Improvements\8239 imp - DETAILS.dwg Plotted on: Aug 07, 2017 - 3:30pm Plotted by: tmiller