BENDS	"B"	"C"	"D"	"E"	"F"
6"–11 1/4"	8"	15"	12"	24"	10"
6"–22 1/2"	8"	19"	12"	24"	13"
6"–45"	8"	30"	12"	24"	15"
6"–90"	8"	30"	12"	24"	28"
8"–11 1/4"	8"	20"	12"	24"	10"
8"–22 1/2"	8"	22"	12"	24"	18"
8"–45"	8"	31"	12"	24"	24"
8"–90"	8"	38"	12"	24"	36"
12"–11 1/4"	8"	30"	12"	24"	15"
12"–22 1/2"	8"	33"	12"	24"	25"
12"–45"	8"	40"	12"	24"	40"
12"–90"	8"	60"	12"	24"	52"
16"–11 1/4"	TL	28"	20"	24"	28"
16"–22 1/2"	TL	39"	20"	24"	39"
16"–45"	TL	55"	20"	24"	55"
16"–90"	TL	91"	20"	24"	60"
20"–11 1/4"	TL	34"	24"	28"	28"
20"–22 1/2"	TL	48"	24"	28"	39"
20"–45"	TL	74"	24"	28"	55"
20"–90"	TL	136"	24"	28"	60"
24"–11 1/4"	TL	40"	28"	28"	40"
24"–22 1/2"	TL	56"	28"	28"	56"
24"–45"	TL	101"	28"	28"	60"
24"–90"	TL	186"	28"	28"	60"
30"–11 1/4"	TL	49"	34"	30"	49"
30"–22 1/2"	TL	79"	34"	30"	60"
30"–45"	TL	154"	34"	30"	60"
30"–90"	TL	285"	34"	30"	60"

TEES	"G"	"H"	"J"	"K"
6"X6"X6"	12"	24"	24"	18"
8"X8"X6"	12"	24"	24"	18"
8"X8"X8"	12"	27"	24"	27"
12"X12"X6"	12"	24"	24"	18"
12"X12"X8"	12"	27"	27"	27"
12"X12"X12"	12"	38"	24"	38"
24"X24"X16"	16"	53"	28"	53"

NOTES:
1. 2" & 4" FITTINGS EQUIVALENT TO 6" FITTINGS.
2. TAPPING SLEEVES TO HAVE BACKING BLOCKS SAME SIZE AS REQUIRED FOR TEES.
"L" = TOTAL LENGTH OF FITTING MINUS CLEARANCE FOR BELLS.

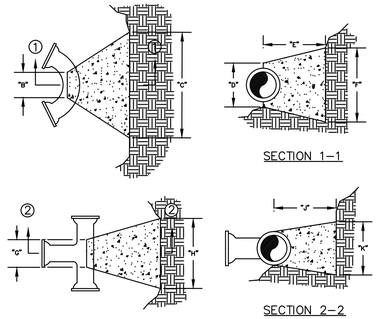

INTERNAL WATER PRESSURE 6" through 12"=200 psi
INTERNAL WATER PRESSURE 16" through 30"=210 psi
BEARING PRESSURE OF SOIL=2000 psi

BACKING BLOCKS

NOT TO SCALE

CITY OF O'FALLON
ENGINEERING DEPARTMENT
O'FALLON, MISSOURI

BACKING BLOCK DETAILS AND LOCATIONS

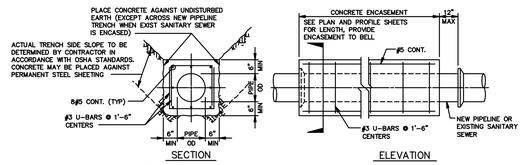

NOTES:
1. AT LOCATIONS WHERE THE TRANSMISSION MAIN CROSSES AN EXIST SANITARY SEWER, SEE SPECIFICATIONS FOR ADDITIONAL REQUIREMENTS.
2. WHEN THE PIPELINE IS PROTECTED WITH POLYETHYLENE TUBE ENCASEMENT, THE CONCRETE ENCASEMENT IS TO COVER THE POLYETHYLENE ENCASEMENT.

CONCRETE ENCASEMENT

NO SCALE

CITY OF O'FALLON
ENGINEERING DEPARTMENT
O'FALLON, MISSOURI

CONCRETE ENCASEMENT DETAILS

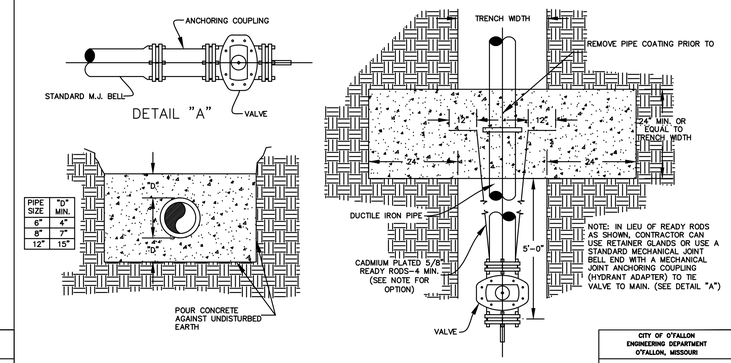

PIPE SIZE	"D" MIN.
6"	4"
8"	7"
12"	15"

NOTE: IN LIEU OF READY RODS AS SHOWN, CONTRACTOR CAN USE RETAINER GLANDS OR USE A STANDARD MECHANICAL JOINT BELL END WITH A MECHANICAL JOINT ANCHORING COUPLING (HYDRANT ADAPTER) TO TIE VALVE TO MAIN. (SEE DETAIL "A")

STRADDLE BLOCK DETAIL

NOT TO SCALE

CITY OF O'FALLON
ENGINEERING DEPARTMENT
O'FALLON, MISSOURI

STRADDLE BLOCK DETAILS

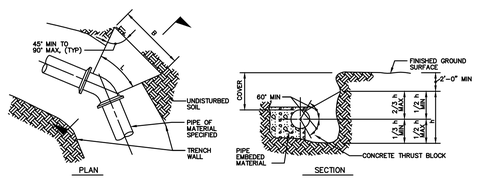

NOTES:
1. AREA OF BLOCK, A = Bxh. BLOCK AREAS ARE SHOWN ON GENERAL LAYOUT OR TABLE.
2. B = h = $\sqrt{A}$", EXCEPT WHERE TOP OF BLOCK IS WITHIN 2 FEET FROM GROUND SURFACE, THEN B = A/h.
3. MINIMUM BLOCK DIMENSION (B & h) SHALL BE AT LEAST OD OF PIPE OR 1 FOOT FOR PIPE OD 12" OR LESS.
4. THE BOTTOM OF THE BLOCK SHALL EXTEND AT LEAST TO THE BOTTOM OF THE TRENCH IN ALL CASES.
5. L=FITTING LENGTH MINUS CLEARANCE FOR BELLS.
6. DETAIL IS SHOWN FOR CAST IRON PIPE; DETAIL IS SIMILAR FOR OTHER TYPES OF PIPE.
7. DIMENSIONS FOR THRUST BLOCKS FOR FIRE HYDRANT ASSEMBLY ARE SHOWN FIRE HYDRANT ASSEMBLY DETAIL.

SIZE	BEND	THRUST AREA	B	H
16"	11 1/2° 22 1/2°	4 SF	2'	2'
16"	45°	8 SF	2.8'	2.8'

CONCRETE THRUST BLOCKING

NOT TO SCALE

CITY OF O'FALLON
ENGINEERING DEPARTMENT
O'FALLON, MISSOURI

CONCRETE THRUST BLOCKING DETAILS

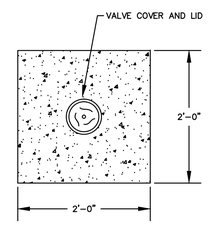

TOP VIEW CONCRETE COLLAR

NOT TO SCALE

Note : 1. Concrete collar joint pateren is required in paved areas such as roadways, driveways, sidewalks or other areas of paved surfaces.
2. Concrete collars are optional in other non-paved areas.

CITY OF O'FALLON
ENGINEERING DEPARTMENT
O'FALLON, MISSOURI

CONCRETE COLLAR DETAIL

Concrete collar will be in accordance will the Concrete collar detail.

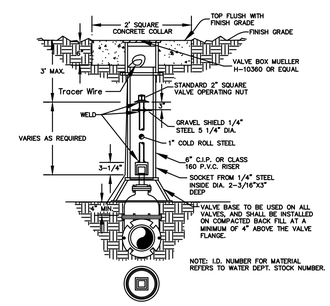

WATER VALVE DETAIL

NOT TO SCALE

*ALL WATER VALVE BOXES SHALL BE CAST IRON

CITY OF O'FALLON
ENGINEERING DEPARTMENT
O'FALLON, MISSOURI

WATER VALVE DETAIL

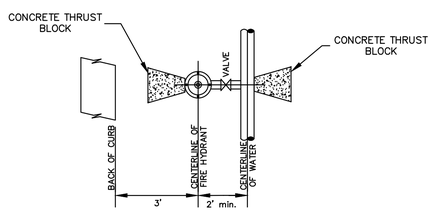

CONFIGURATION

ALL FIRE HYDRANTS SHALL BE 3' OFF BACK OF CURB
ALL WATER MAINS SHALL BE A MIN. OF 5' OFF BACK OF CURB

TYPICAL WATER MAIN AND FIRE HYDRANT LOCATIONS

NOT TO SCALE

CITY OF O'FALLON
ENGINEERING DEPARTMENT
O'FALLON, MISSOURI

WATER MAIN FIRE HYDRANT DETAIL

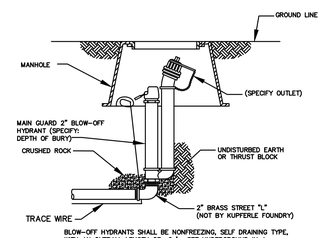

BLOW-OFF HYDRANTS SHALL BE NONFREEZING, SELF DRAINING TYPE, WITH AN OVERALL LENGTH OF 2'. SET UNDERGROUND IN A METER BOX, THESE HYDRANTS WILL BE FURNISHED WITH A 2" FIP INLET, A NON-TURNING OPERATING ROD, AND SHALL OPEN TO THE LEFT. ALL OF THE WORKING PARTS SHALL BE OF BRONZE-TO BRONZE DESIGN, AND BE SERVICEABLE FROM ABOVE GRADE WITH NO DIGGING. THE OUTLET SHALL ALSO BE BRONZE AND BE 2-1/2" NST. HYDRANTS SHALL BE LOCKABLE TO PREVENT UNAUTHORIZED USE AS MANUFACTURED BY KUPFERLE FOUNDRY CO., ST. LOUIS, MO, OR APPROVED EQUAL.

(SPECIFY OVERALL LENGTH 6" SHORTER THAN NORMAL DEPTH OF BURY. MINIMUM OPENING IN METER BOX SHOULD BE 10".)

BLOW-OFF HYDRANT

NOT TO SCALE

CITY OF O'FALLON
ENGINEERING DEPARTMENT
O'FALLON, MISSOURI

BLOW-OFF HYDRANT DETAIL

City of O'Fallon Standard Commercial Notes and Details – June 2010

THD DESIGN GROUP, INC.
"your solution for engineering and surveying"
COPYRIGHT 2016
148 CHESTERFIELD INDUSTRIAL BLVD, CHESTERFIELD, MO 63005
TEL: 636-394-3927
FAX: 636-394-3927
WEB: THDESIGNGROUP.COM

PROJECT TITLE:
CULVER'S OF O'FALLON-BRAMBLETT CROSSING

Owner Info: Hoerman Family, LP
Developer/Owner Under Contract: KK+G, LLC.
Contact: Allen Walz
1920 Jefferson Street
Jefferson City, MO 65109

Water Construction Details

P+Z No.: 3805.08.02
Approval Date:
01/07/2016
City No.