NOTE: THIS DETAIL IS FROM PWSD#2

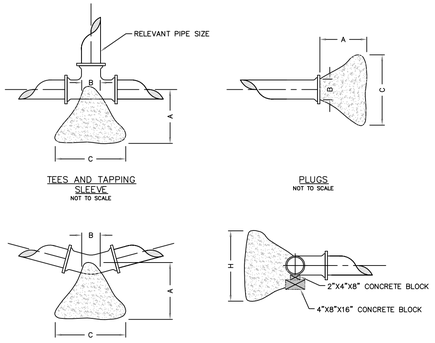

THRUST BLOCK DIMENSIONS - INCHES												
PIPE DIA.	ALL FTGS.		TEE PLUG TAPPING		90 DEGREE BEND		45 DEGREE BEND		22-1/2 BEND		11-1/4 BEND	
	A	B	C	H	C	H	C	H	C	H	C	H
4	14	4	24	12	26	15	18	12	12	12	12	12
6	16	6	36	18	36	24	30	18	24	12	12	12
8	20	8	36	30	42	36	36	24	24	18	18	12
10	20	10	48	36	66	36	36	36	28	24	18	18
12	24	12	68	36	82	42	52	36	40	24	28	18

NOTE

FOR FITTINGS LARGER THAN 12", SPECIAL RESTRAINT DESIGNS ARE REQUIRED.

HORIZONTAL THRUST BLOCKING
DETAIL "C"

Rev. MAY 4-2-2009

NOTE: THIS DETAIL IS FROM PWSD#2

Buffalo box is an acceptable product to use. Tyler 562-S and 564-S are acceptable products.

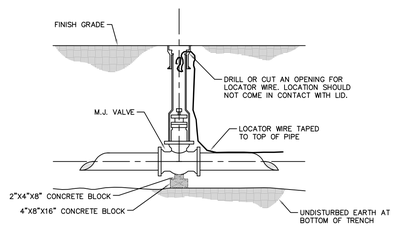

GATE VALVE DETAIL
NOT TO SCALE
DETAIL "D"

Rev. MAY 4-2-2009

NOTE: THIS DETAIL IS FROM PWSD#2

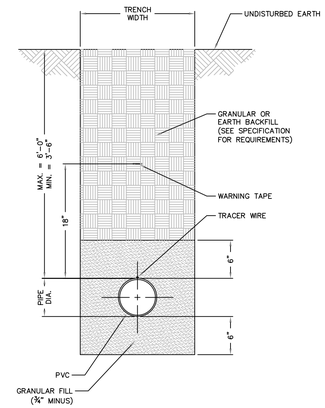

NOTES

1) SEE SPECIFICATIONS FOR ADDITIONAL DETAILS FOR BEDDING AND BACKFILL.

TYPICAL TRENCH SECTION
FOR PVC PIPE
NOT TO SCALE
DETAIL "A"
PAGE 1 OF 2

Rev. MAY 4-2-2009

NOTE: THIS DETAIL IS FROM PWSD#2

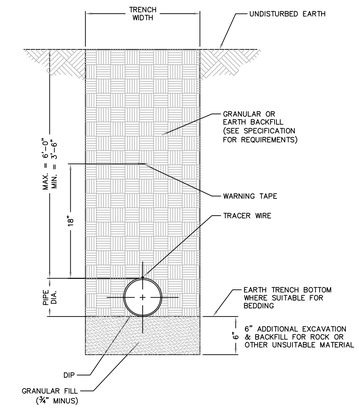

NOTES

1) POLYWRAP REQUIRED FOR DUCTILE IRON PIPE
2) SEE SPECIFICATIONS FOR ADDITIONAL DETAILS FOR BEDDING AND BACKFILL.

TYPICAL TRENCH SECTION
FOR DUCTILE IRON PIPE
NOT TO SCALE
DETAIL "A"
PAGE 2 OF 2

Rev. MAY 4-2-2009

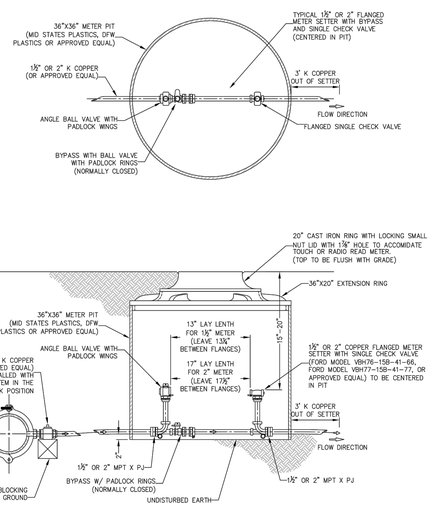

TYPICAL 1½" & 2"
WATER SERVICE
DETAIL "E"
NOT TO SCALE

APRIL 20, 2005
Rev. SEPT. 5, 2007

PUBLIC WATER SUPPLY DISTRICT #2
OF SAINT CHARLES COUNTY

18

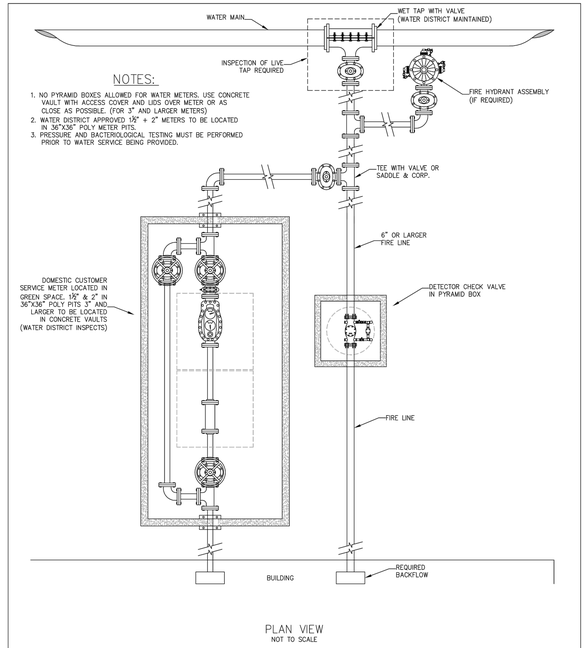

NOTES:

1. NO PYRAMID BOXES ALLOWED FOR WATER METERS. USE CONCRETE VAULT WITH ACCESS COVER AND LIDS OVER METER OR AS CLOSE AS POSSIBLE. (FOR 3" AND LARGER METERS)
2. WATER DISTRICT APPROVED 1½" + 2" METERS TO BE LOCATED IN 36"X36" POLY METER PITS.
3. PRESSURE AND BACTERIOLOGICAL TESTING MUST BE PERFORMED PRIOR TO WATER SERVICE BEING PROVIDED.

PLAN VIEW
NOT TO SCALE

TYPICAL COMMERCIAL SERVICE CONNECTION
WITH FIRE PROTECTION
DETAIL "H"

APRIL 20, 2005
Rev. SEPT. 5, 2007

PUBLIC WATER SUPPLY DISTRICT #2
OF SAINT CHARLES COUNTY

21

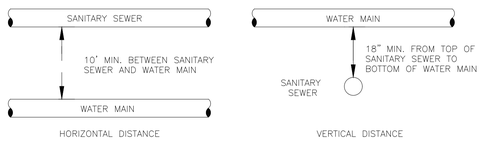

TYPICAL WATER AND SEWER
SEPARATION
NOT TO SCALE

CITY OF O'FALLON
ENGINEERING DEPARTMENT
O'FALLON, MISSOURI

WATER AND SEWER
SEPARATION DETAIL

Ductile Iron Pipe installation shall follow the Ductile Iron Research Association (DIPRA) guide line.
The Installation of PVC Pipe shall follow the Uni-Bell PVC Pipe Association Handbook of PVC Design and Construction.

City of O'Fallon Standard Notes and Details - July 2019

THESE DOCUMENTS ARE THE EXCLUSIVE PROPERTY OF MICHAEL E. NEIKIRK, PE AND THEREBY PROTECTED UNDER COPYRIGHT LAWS. ALL ORIGINAL DESIGNS, SPECIFICATIONS AND IDEAS REPRESENTED HERE ARE FOR THE SOLE USE OF THIS PROJECT AND SHALL NOT BE REPRODUCED OR ALTERED IN ANY MANNER WITHOUT THE WRITTEN CONSENT OF MICHAEL E. NEIKIRK, PE.
Copyright 2021 Michael E. Neikirk, PE. All rights reserved.

REVISIONS

NO.	DESCRIPTION	DATE
	CONSTRUCTION DOCUMENTS	11/29/22

MICHAEL E. NEIKIRK PE
Civil Engineer
306 North Market Street, Ste 101
Mt. Carmel, IL 62863
Phone: (618) 263-4100

SCALE:	NTS
DRAWN BY:	RM
DESIGNER:	TJL,RM
CHECKED BY:	TJL
ENGINEER:	Michael E. Neikirk
ARCHITECT:	IDesign
OWNER:	Bluegrass Hospitality Group

STATE OF MISSOURI
MICHAEL E. NEIKIRK
NUMBER PE-2005010806
PROFESSIONAL ENGINEER

CERTIFIED BY

JOB TITLE
DRAKE'S RESTAURANT
900 HIGHWAY K
O'FALLON, MO

DRAWING TITLE
UTILITY DETAILS

FILE LOCATION

DRAWING NUMBER
C5.1

REV #