DETAILS
FALLON PARKWAY
PLAT TWO

7/29/05 — 02-695

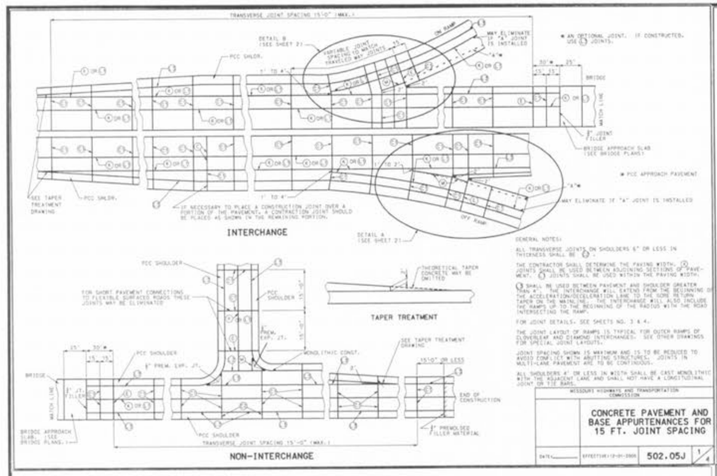

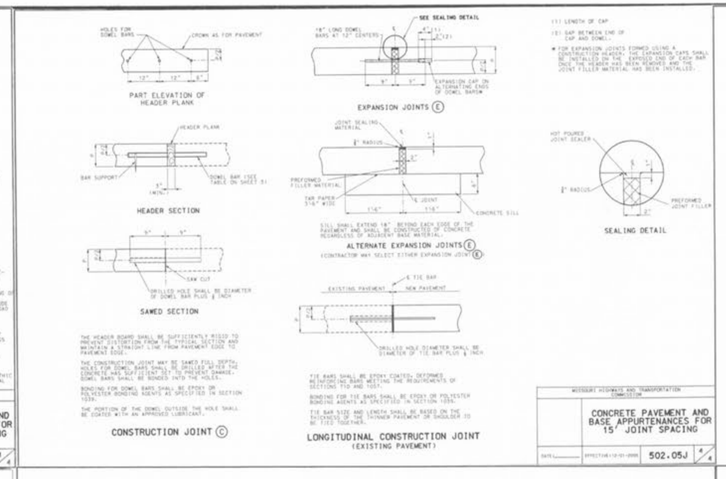

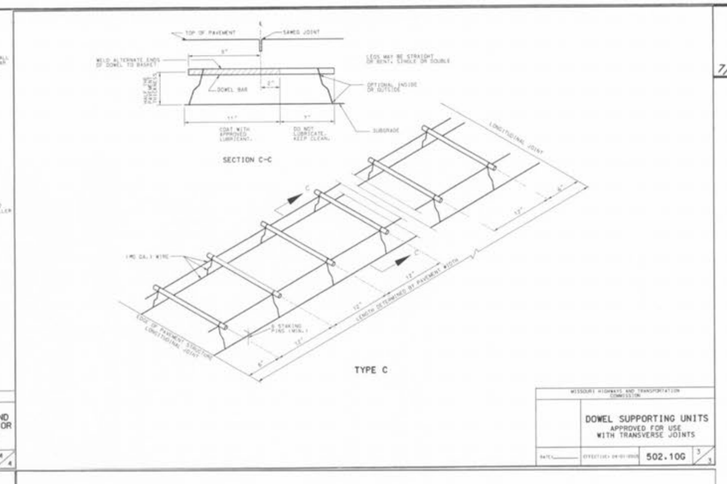

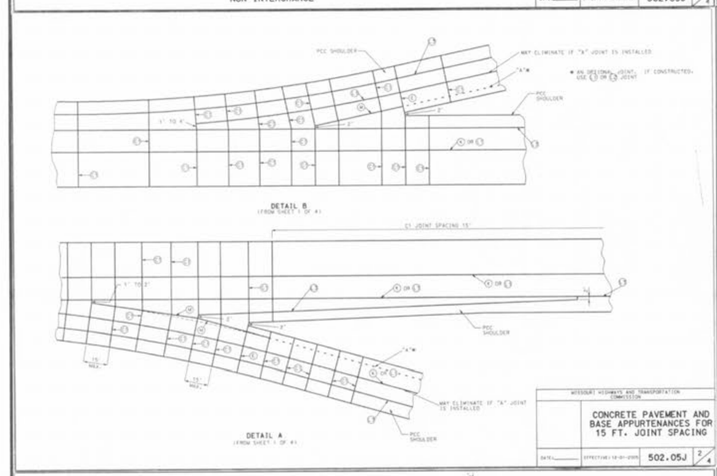

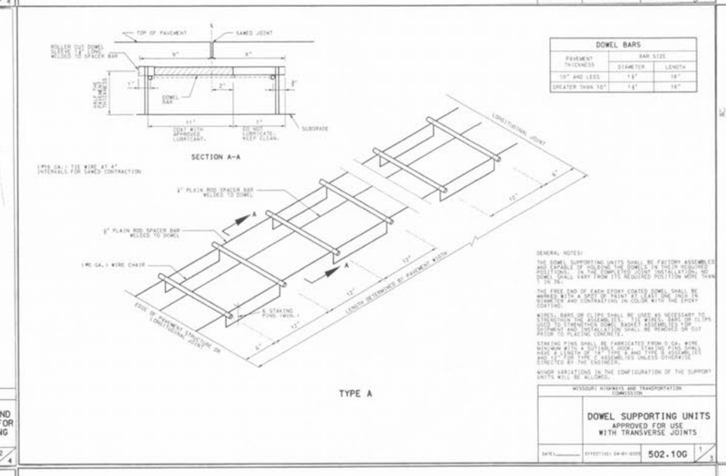

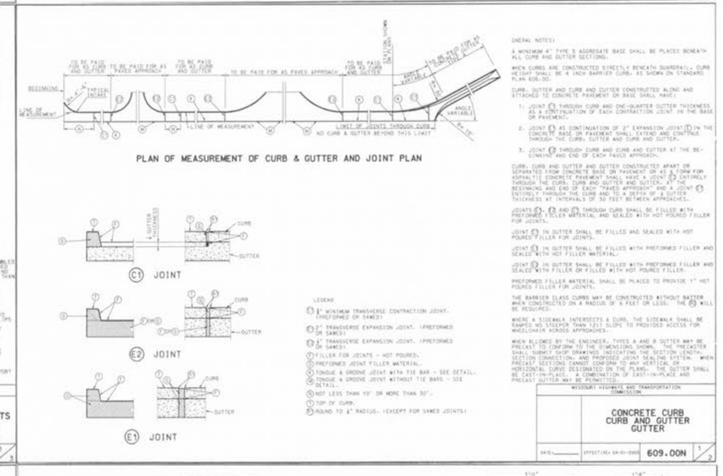

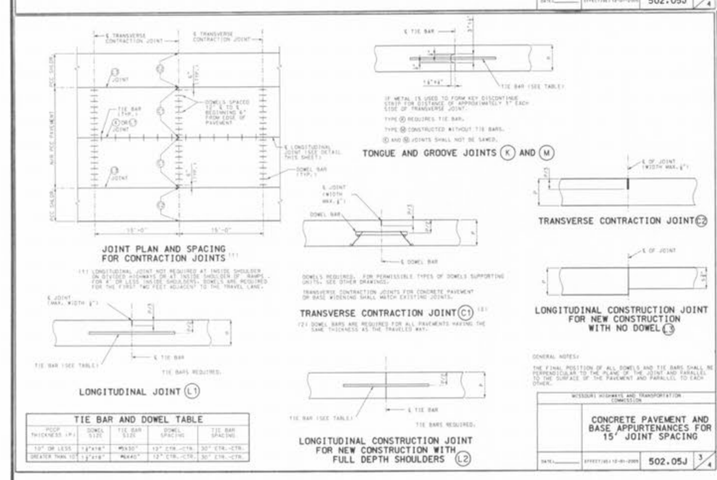

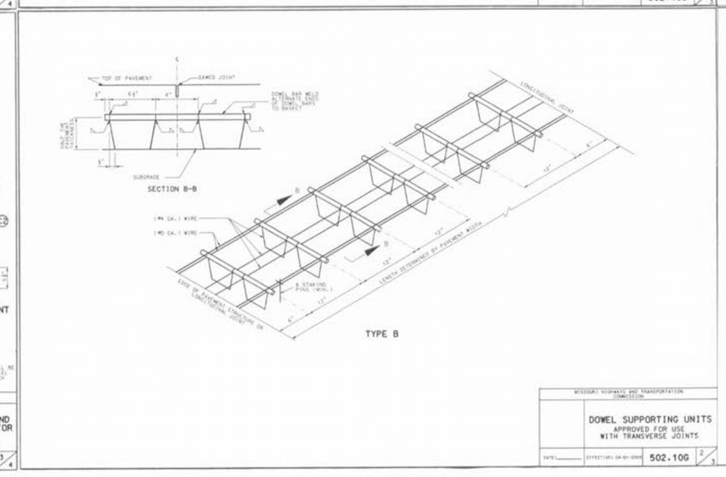

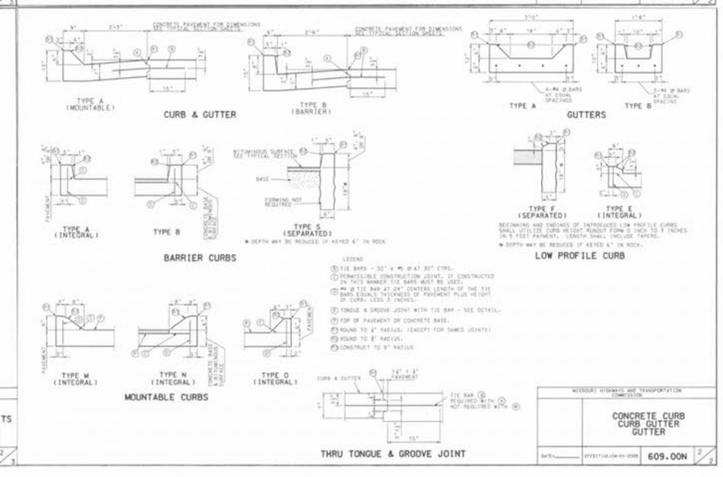

CD 4