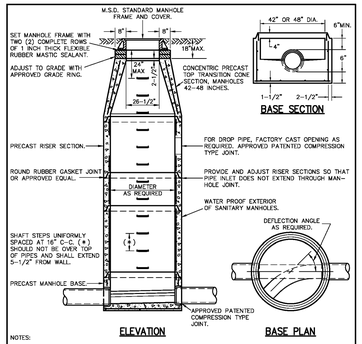

NOTES:

1) THE MINIMUM INSIDE DIAMETER FOR THE BASE AND RISER SECTIONS SHALL BE 42 INCHES FOR 8 INCH DIAMETER SANITARY SEWERS AND ALL STORM SEWERS. THE MINIMUM INSIDE DIAMETER FOR SANITARY SEWERS LARGER THAN 8 INCH DIAMETER IS 48 INCHES. MANHOLE SHALL MEET ASTM C-478 REQUIREMENTS.
2) FLOWLINE ELEVATION OF INCOMING PIPES SHALL BE 1 INCH HIGHER THAN THAT OF OUTGOING PIPE.
3) PIPE SIZES LARGER THAN 24 INCH DIAMETER MAY REQUIRE MANHOLE DIAMETERS OF 60 INCH, 72 INCH OR 96 INCH AS DETERMINED BY OUTSIDE DIAMETERS AND ORIENTATIONS OF CONNECTING PIPES.
4) ECCENTRIC CONES SHALL BE USED ON DIAMETERS 60 INCH AND LARGER. STEPS SHALL EXTEND DOWN VERTICAL WALL OF CONE.
5) PRIOR TO FABRICATION, SHOP DRAWINGS SHALL BE SUBMITTED TO THE DISTRICT FOR APPROVAL OF MANHOLES ON PIPE DIAMETERS LARGER THAN 24 INCH AND ALSO FOR THOSE STRUCTURES WITH A DROP PIPE CONNECTION.

PRECAST CONCRETE MANHOLE	METROPOLITAN ST. LOUIS SEWER DISTRICT *Standard Details of Sewer Construction*		
	Dr. WSH/SAM Ch. J.C.K.	2009	SHEET 21 (REV)

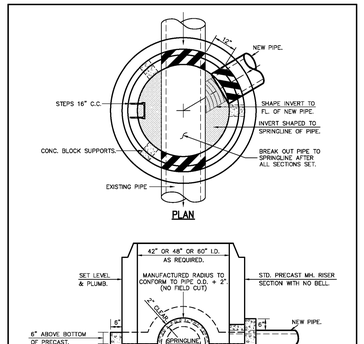

NOTE:
WATER STOP REQUIRED FOR P.V.C., SANITARY & COMBINED SEWERS TO BE VACUUM TESTED.

PRECAST MANHOLE ON EXIST. PIPE W/CONTINUOUS FLOW ONLY	METROPOLITAN ST. LOUIS SEWER DISTRICT *Standard Details of Sewer Construction*		
	Dr. S.A.M. Ch. P.W.S.	2009	SHEET 22

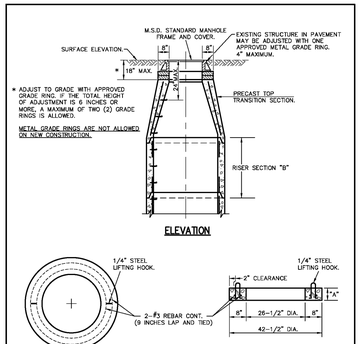

NOTES:

1) IF BRICK IS USED DO NOT PLASTER INSIDE OF MANHOLE.
2) IF MANHOLE IS BURIED MORE THAN 18 INCHES, A RISER SECTION WILL HAVE TO BE ADDED.
3) DIMENSION "A" STOCK GRADE RING HEIGHT OPTIONS. (3 INCHES MINIMUM TO 11 INCHES MAXIMUM.)
4) DIMENSION "B" STOCK RISER SECTION HEIGHT OPTIONS. (12 INCH, 24 INCH, 36 INCH AND 48 INCH)

ADJUST TO GRADE	METROPOLITAN ST. LOUIS SEWER DISTRICT *Standard Details of Sewer Construction*		
	Dr. S.A.M. Ch. P.W.S.	2009	SHEET 23

NOTES:

1) INLETS ON THIS SHEET ARE TO BE USED IN LOCATIONS WHERE STANDARD OPEN THROAT INLETS CAN NOT BE USED IN PAVED TRAFFIC WAY AND IN LIMITED EASEMENTS.
2) STANDARD DEPTH = 4.0 FEET.
3) ADJUSTMENTS SHALL BE MADE WITH PRECAST ADJUSTMENT RINGS AND APPROVED BITUMINOUS SEALANT.

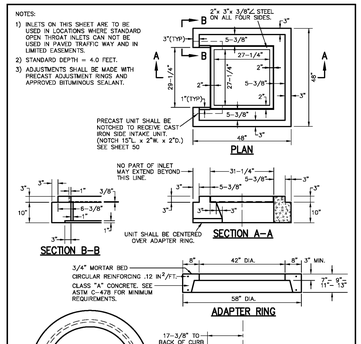

GRATE SEAT FOR 2 GRATE INLET WITH SIDE INTAKE	METROPOLITAN ST. LOUIS SEWER DISTRICT *Standard Details of Sewer Construction*		
	Dr. WSH/MCK Ch. J.C.K.	2009	SHEET 32

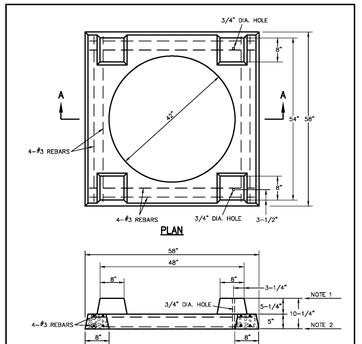

NOTES:

1) SET STANDARD INLET STONE IN 3/4" MORTAR BED AND DOWEL WITH 5/8" DIA. 1'-0" LONG PINS AND GROUT.
2) RAISE TO FINAL GRADE WITH COURSES OF BRICK AND SET THE UNIT TO BASE WITH 3/4" MORTAR BED.
3) THIS UNIT TO BE USED WITH 42 INCH I.D. BASE.
4) 5000 P.S.I. CONCRETE IS REQUIRED.

PRECAST CONCRETE UNIT FOR 4 WAY AREA INLET	METROPOLITAN ST. LOUIS SEWER DISTRICT *Standard Details of Sewer Construction*		
	Dr. DAB/SAM Ch. J.C.K.	2009	SHEET 40

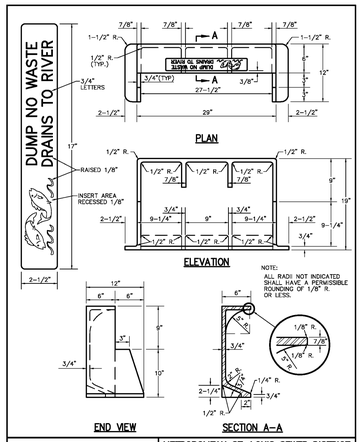

CAST IRON SIDE INTAKE UNIT FOR GRATED INLETS 249 LBS.	METROPOLITAN ST. LOUIS SEWER DISTRICT *Standard Details of Sewer Construction*		
	Dr. RGW/SAM Ch. J.C.K.	2009	SHEET 51

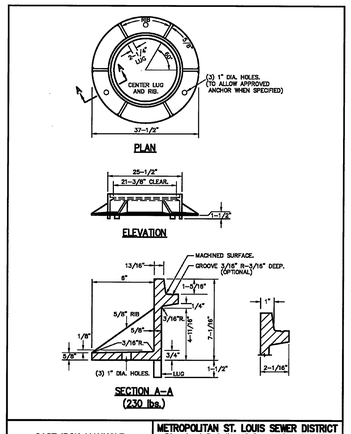

CAST IRON MANHOLE FRAME	METROPOLITAN ST. LOUIS SEWER DISTRICT *Standard Details of Sewer Construction*		
	Dr. DAB/SAM Ch. J.C.K.	2009	SHEET 52

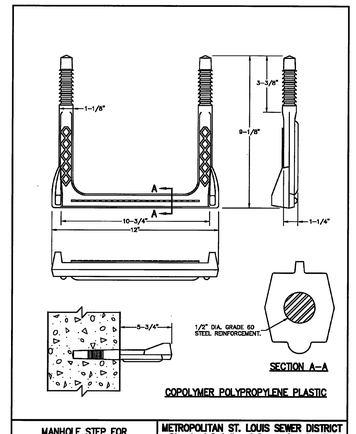

MANHOLE STEP FOR PRECAST & CAST-IN-PLACE MANHOLE	METROPOLITAN ST. LOUIS SEWER DISTRICT *Standard Details of Sewer Construction*		
	Dr. D.A.B. Ch. J.C.K.	2009	SHEET 58

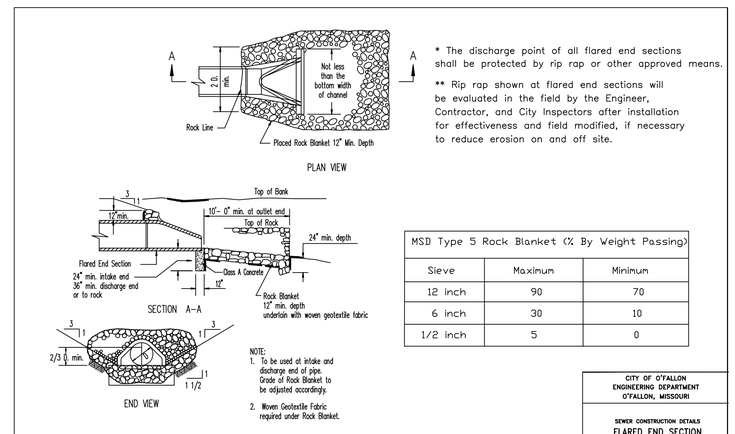

* The discharge point of all flared end sections shall be protected by rip rap or other approved means.

** Rip rap shown at flared end sections will be evaluated in the field by the Engineer, Contractor, and City Inspectors after installation for effectiveness and field modified, if necessary to reduce erosion on and off site.

NOTE:
1. To be used at intake and discharge end of pipe. Grade of Rock Blanket to be adjusted accordingly.
2. Woven Geotextile Fabric required under Rock Blanket.

MSD Type 5 Rock Blanket (% By Weight Passing)		
Sieve	Maximum	Minimum
12 inch	90	70
6 inch	30	10
1/2 inch	5	0

CITY OF O'FALLON ENGINEERING DEPARTMENT O'FALLON, MISSOURI
SEWER CONSTRUCTION DETAILS FLARED END SECTION (INLET/OUTLET PROTECTION)

ALL DOWNSTREAM FLARED END SECTIONS REQUIRE A 3 FOOT DEEP CUTOFF WALL AS REQUIRED FOR FE 100 AND FE 102..

The Model S3 hydrant is designed for use anywhere potable water is required.

Unlike conventional hydrants which drain the water into the ground, the Model S3 employs a reservoir below frost line to contain the water. The hydrant is completely sealed to prevent surface and ground water from entering reservoir or service line. The valve, with it's unique venturi design, removes the stored water along with the water being used.

The Model S3 is equipped with a diverter spout, which allows the hydrant to be operated independently from the backflow preventer. When the hydrant is to be used with a hose, the diverter sleeve is pulled down during flow and water is automatically diverted to the backflow preventer hose connection. The diverter will work with or without a hose attached to the backflow preventer and will automatically release any time the hydrant is shut off.

An important feature of the S3 is easy maintenance. The entire working portion of the hydrant can be removed from the reservoir without any excavation.

SPECIFICATIONS:
HOSE CONNECTION BACKFLOW PREVENTER (BFP)
- NIDELB® Model 3/HIF
- ASSE 1052
- Field Testable (see instruction sheet)
- Two Check Valves

OPTIONAL: ASSE 1057 listed - Consists of NIDELB® Model 34HF Single Check Vacuum Breaker
Order example: S3-Bury Depth-SC

FEMALE INLET - 1" N.P.T.
MIN PRESSURE - 20 psi
MAX PRESSURE - 100 psi
MAX TEMPERATURE - 120° F

Parent Information:
http://www.woodfordmfg.com/Woodford/patents/
Installation and Troubleshooting Instructions see woodfordmfg.com or call 1-800-621-6032

NOTICE
FOR WINTER USE: The hydrant must be operated at full flow, through the diverter, for a minimum of 30 seconds before and after each use to drain the hydrant and prevent freezing.

WOODFORD

Backflow Protected
Automatic Draining
Freezeless

Sanitary Yard Hydrant Model S3

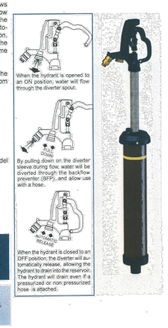

When ordering, specify bury depth.

©2021 WOODFORD Mfg.
Rev. 09/21 Form No. S3.113

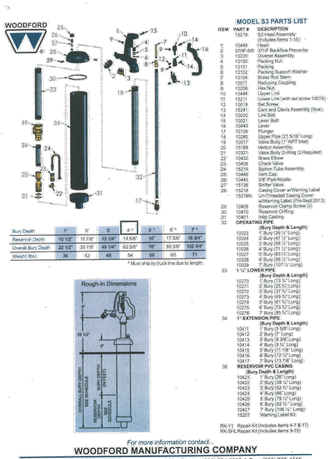

Bury Depth	1'	2'	3'	4'*	5'*	6'*	7'*
Reservoir Depth	10 1/2"	11 7/8"	13 1/4"	14 5/8"	16"	17 3/8"	18 3/4"
Overall Bury Depth	22 1/2"	27 7/8"	48 1/4"	62 5/8"	76"	89 3/8"	102 3/4"
Weight (lbs)	36	42	48	54	58	65	71

* Must ship by truck line due to length.

MODEL S3 PARTS LIST

ITEM	PART #	DESCRIPTION
1	15218	S3 Head Assembly (Includes Items 7-16)
2	10449	Handle
3	37HF-DS	3/7HF Backflow Preventer
4	15200	Diverter Assembly
5	15201	Diverter Spout
6	12101	Packing
7	10102	Packing Support Washer
8	10104	Brass Rod Stem
9	13077	Reducing Coupling
10	10444	Upper Link
11	10445	Upper Link
12	15211	Lower Link (with set screw 10219)
13	10219	Set Screw
14	15240	Lever and Cleats Assembly (Std#)
15	10446	Cleat (Std#)
16	10021	Lever Bolt
17	10443	Lever
18	10285	Spacer
19	10286	Upper Pipe (21 5/16" Long)
20	10317	Valve Body (1" NPT Inlet)
21	15189	Venturi Assembly
22	10321	Valve Body O-Ring (2 Required)
23	10322	Check Spring
24	10408	Check Valve
25	15216	Siphon Tube Assembly
26	10287	Siphon Tube
27	10465	3/4" Pipe Nipple
27	15136	Sniffer Valve
28	15218	Casing Cover w/Warning Label
	15218N	Un-Threaded Casing Cover (Use with Vandal Proof Bolt 28313)
29	10409	Reservoir Cover Screws (4)
30	10410	Reservoir O-Ring
31	10401	Reservoir Casing
32	OPERATING ROD:	
		(Bury Depth & Length)
	10023	1' Bury (26 1/2" Long)
	10024	2' Bury (41 1/2" Long)
	10025	3' Bury (56 1/2" Long)
	10026	4' Bury (71 1/2" Long)
	10027	5' Bury (83 1/2" Long)
	10028	6' Bury (98 1/2" Long)
	10029	7' Bury (107 1/2" Long)
33	1 1/4" LOWER ROD:	
		(Bury Depth & Length)
	10270	1' Bury (73 3/4" Long)
	10271	2' Bury (88 3/4" Long)
	10272	3' Bury (28 3/4" Long)
	10273	4' Bury (49 3/4" Long)
	10274	5' Bury (61 3/4" Long)
	10275	6' Bury (73 3/4" Long)
	10276	7' Bury (85 3/4" Long)
34	1" EXTENSION PIPE:	
		(Bury Depth & Length)
	10411	1' Bury (5 3/8" Long)
	10412	2' Bury (17" Long)
	10413	3' Bury (28 5/8" Long)
	10414	4' Bury (9 3/4" Long)
	10415	5' Bury (11 1/8" Long)
	10416	6' Bury (12 1/2" Long)
	10417	7' Bury (13 7/8" Long)
35	RESERVOIR PVC CASING:	
		(Bury Depth & Length)
	10423	1' Bury (28" Long)
	10424	2' Bury (42" Long)
	10425	3' Bury (52 5/8" Long)
	10426	4' Bury (66" Long)
	10428	5' Bury (79 1/2" Long)
	10429	6' Bury (92 1/2" Long)
	10430	7' Bury (105 1/2" Long)
	15231	Warning Label Kit
	RK-11	Repair Kit (Includes Items 4-7 & 17)
	RK-S3L	Repair Kit (Includes Items 9-15)

For more information contact...
WOODFORD MANUFACTURING COMPANY
2121 Waynoka Road, Colorado Springs, Colorado 80915 * **Phone:** (800) 621-6032 * **Fax:** (800) 765-4115
To view our complete product line visit: www.woodfordmfg.com or email: sales@woodfordmfg.com
A Division Of WCM Industries, Inc.

©2021 WOODFORD Mfg.
Rev. 09/21 Form No. S3.113

* The City of O'Fallon must be provided with a symbol/medallion for review and approval prior to installation. Contact the City if any information is needed.

Size	Style	Adhesive	Message (Part #)
3 7/8" TO 4"	Crystal Cap or Standard Style	Epoxy	No Dumping Drains to Waterway

PEEL AND STICK ADHESIVE PADS WILL NOT BE ALLOWED. ACP INTERNATIONAL 3-7/8" EPOXY CRYSTAL CAP NO DUMPING DRAINS TO WATERWAYS (SD-W-CC) OR DAS MANUFACTURING, INC. 4" EPOXY STANDARD STYLE NO DUMPING DRAINS TO STREAMS (#SDS)

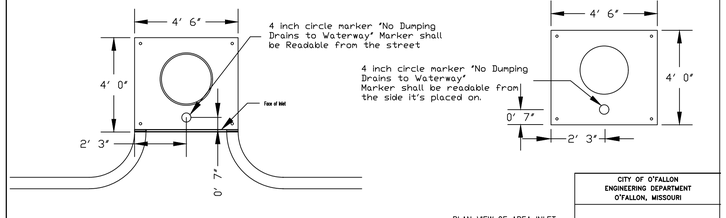

CITY OF O'FALLON ENGINEERING DEPARTMENT O'FALLON, MISSOURI
STORM DRAIN MARKER LOCATION

PROJECT TITLE:
CONSTRUCTION PLANS FOR:
First Baptist Church of O'Fallon
8750 Veterans Memorial Pkwy
O'Fallon, MO 63366

Box Project # 93-4007D Issue Date: XX/XX/2022

ENGINEERING
PLANNING
SURVEYING
221 Point West Blvd.
St. Charles, MO 63301
636-928-5552
FAX 928-1718

DISCLAIMER OF RESPONSIBILITY
I hereby specify that the documents intended to be authenticated by my seal are limited to this sheet, and I hereby disclaim any responsibility for all other Drawings, Specifications, Estimates, Reports or other documents or instruments relating to or intended to be used for any part or parts of the architectural or engineering project or survey.

STATE OF MISSOURI
CLIFFORD L. HEITMANN
NUMBER E-29817
REGISTERED PROFESSIONAL ENGINEER
7-14-22

CLIFFORD L. HEITMANN
CIVIL ENGINEER
E-29817

Copyright 2022
Box Engineering Company, Inc.
Authority No. 000655
All Rights Reserved

REVISIONS

11-7-22	CITY COMMENTS
11-29-22	CITY COMMENTS
12-9-22	BLDG. UTILITIES
12-15-22	BID SET

Developer / Owner:
First Baptist Church of O'Fallon
8750 Veterans Memorial Pkwy
O'Fallon, MO 63366
Phone #

DETAILS

P+Z No. 22-005714
Approved: 07-07-22

City No.
22-010520