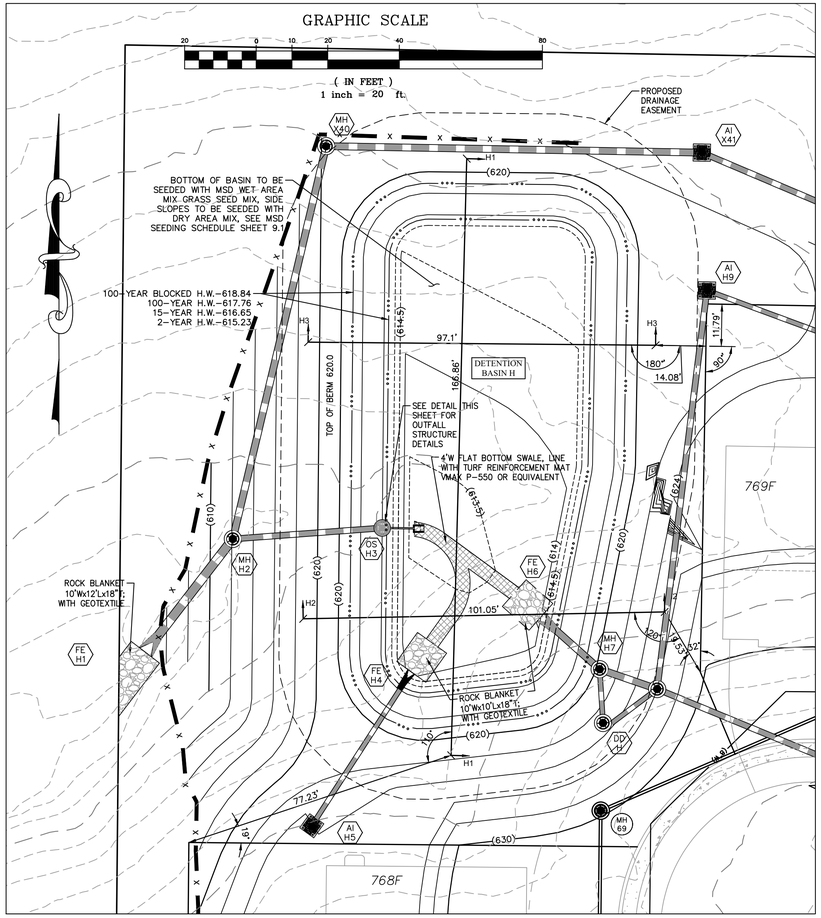

SHOP DRAWING REQUIRED

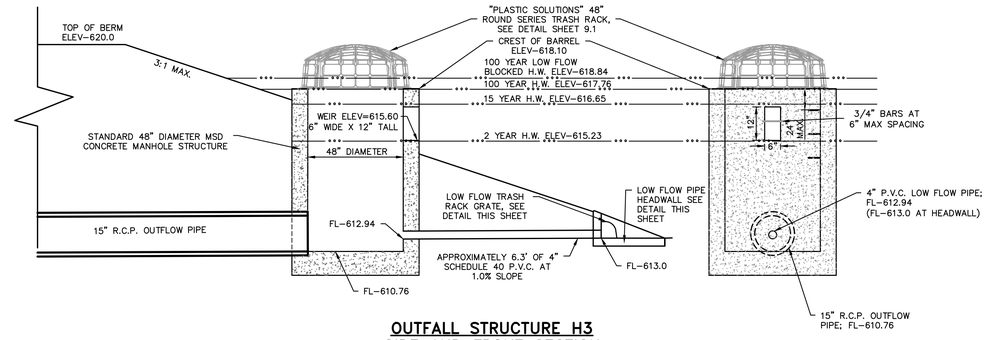

OUTFALL STRUCTURE H3 SIDE AND FRONT SECTION
N.T.S.

R-7512-A1
Cast Iron Pipe Screen for 10-inch Pipe

For overflow drain.

For maximum free drainage area with openings sized to prevent clogging.

R-7512-A1 Width 16" for 10" pipe

Height....13 inches
Length....18 inches
Openings.....1 inch

Six 3/4" Holes for Anchor Bolts

LOW FLOW TRASH RACK DETAIL

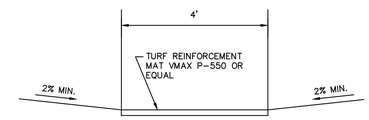

4' WIDE FLAT BOTTOM DITCH DETAIL
N.T.S.

NOTE:
1. MINIMUM 2% SLOPE LATERALLY TO SWALE AND 1% LONGITUDINALLY ALONG SWALE TO PREVENT STANDING WATER.
2. SWALE SHALL BE LINED WITH VMAX P-550 TURF REINFORCEMENT MAT OR APPROVED EQUAL.
4. SWALE SHALL BE SEEDED WITH WET SEED MIX PER MSD SEEDING TABLE.

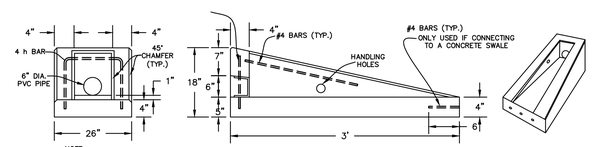

NOTE:
REFER TO ILLINOIS DEPARTMENT OF TRANSPORTATION DRAWING STANDARD 2382-1 FOR ADDITIONAL INFORMATION.

LOW FLOW PIPE HEADWALL DETAIL
N.T.S.

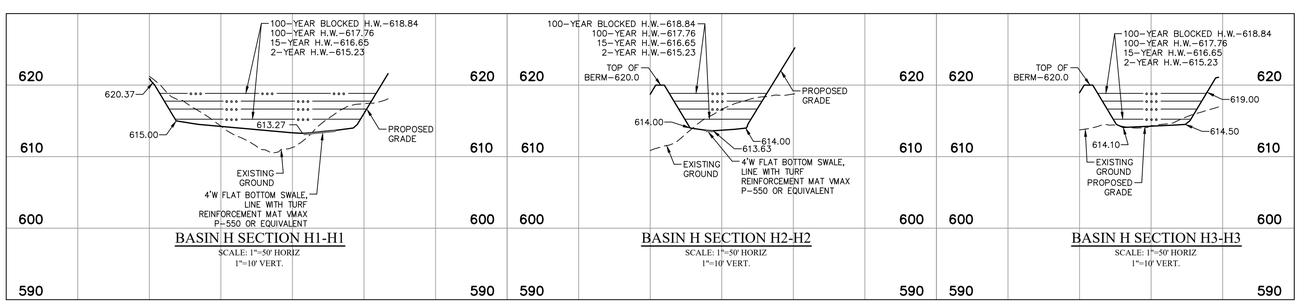

BASIN H SECTION H1-H1
SCALE: 1"=50' HORIZ
1"=10' VERT.

BASIN H SECTION H2-H2
SCALE: 1"=50' HORIZ
1"=10' VERT.

BASIN H SECTION H3-H3
SCALE: 1"=50' HORIZ
1"=10' VERT.

ISSUE REMARKS/DATE

1	2024-08-13, INITIAL SUBMITTAL CITY PH.2
2	2024-11-08, REVISED PER CITY COMMENTS
3	2025-01-03, REVISED PER CITY COMMENTS
4	2025-02-11, REVISED PER CITY COMMENTS

PROJECT TITLE

HARVEST AT HOPEWELL
O'Fallon, Missouri
OFALLON PHASE 2

THE STERLING CO.
ENGINEERS & SURVEYORS
5055 New Baumgartner Road
St. Louis, Missouri 63129
Ph 314-487-0440 Fax 314-487-8944
www.sterling-eng-sur.com
Corporate Certificate of Authority #001348

The Professional Engineer's seal and signature affixed to this document indicates that it was prepared by me or under my direct supervision and that I am a duly licensed professional engineer. A digital signature does not be considered prepared by, this engineer, and the engineer expressly disclaims any and all responsibility for such plans, drawings or documents that contains a digital signature.

Date: 02-11-2025
Michael G. Boerding
License No. MO E-28643
Professional Engineer

HARVEST HOPEWELL, LLC
5091 New Baumgartner Road
St. Louis, Missouri 63129

DETENTION BASIN H DETAILS

P+Z No.	21-004994
City No.	21-011444
Date:	02-11-2025
Job No.	20-09-327

Page No.
9.8
IMP

"FINAL PLAN" Approval Date: Dec. 16, 2021

Drawing name: V:\2009327 Highway N Assemblage\Drawings\Engineering\Improvements\9327 IMP Basin Details.dwg Plotted on: Feb 11, 2025 - 10:15am Plotted by: jluetkenhaus