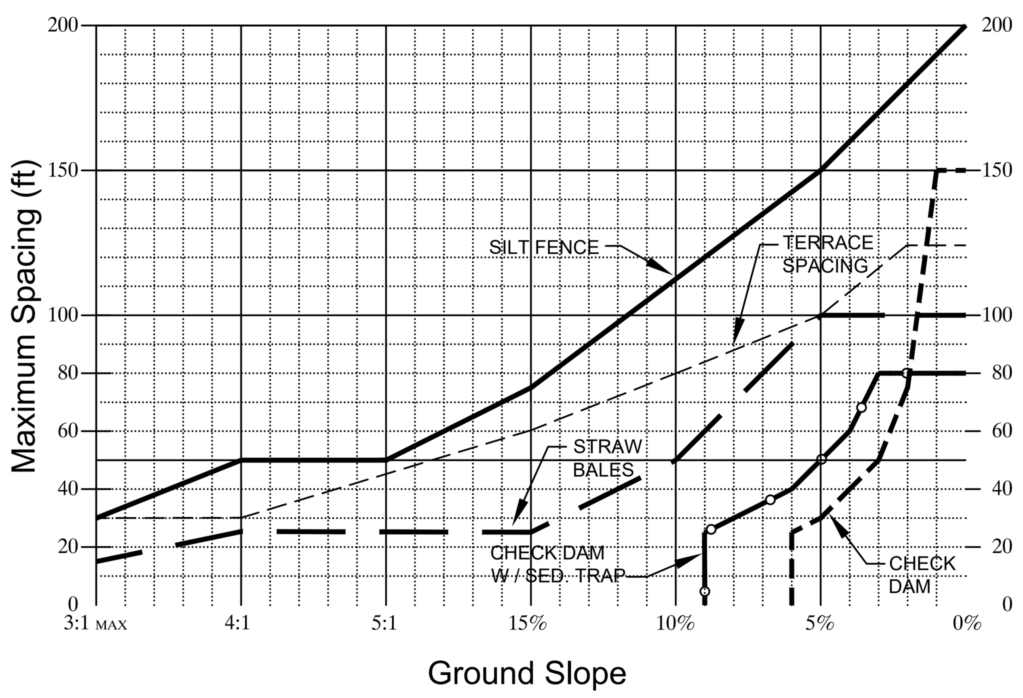

DESIGN CRITERIA

1. SILT FENCE FOR SHEET FLOW SHALL HAVE A MAXIMUM DRAINAGE AREA OF 1/4 ACRE PER 100 LF.
2. STRAW BALE BARRIERS FOR SHEET FLOW SHALL HAVE A MAXIMUM DRAINAGE AREA OF 1/4 ACRE PER 100 LF.
3. REFER TO INDIVIDUAL ESC FIGURE FOR INSTALLATION.
4. TERRACING INCLUDES LOGS, WATTLES & FILTER SOCKS.

CITY OF O'FALLON
ENGINEERING DEPARTMENT
O'FALLON, MISSOURI

SPACING CHART FOR ESC DEVICES

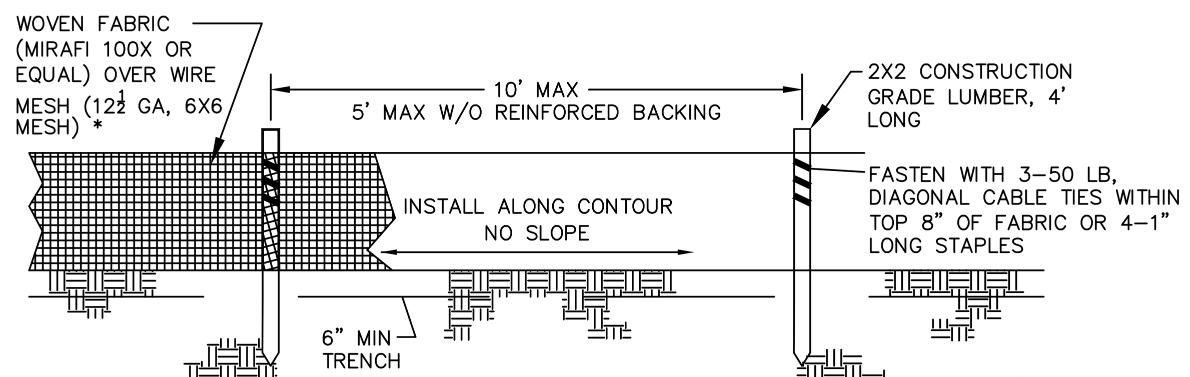

ELEVATION

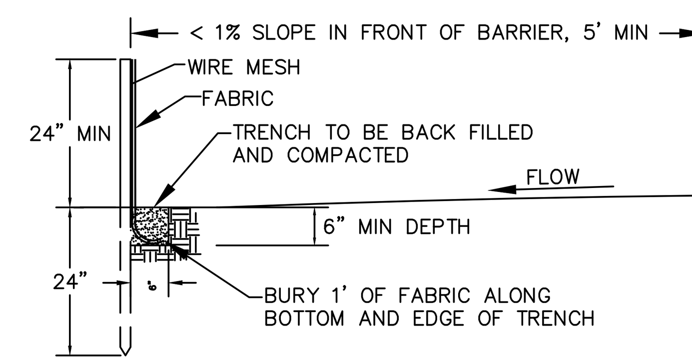

SECTION

CRITERIA

1. SILT FENCE SHALL BE 24 INCHES HIGH.
2. SILT FENCE SHALL NOT BE USED FOR CONCENTRATED FLOWS.
3. GEOSYNTHETIC REINFORCED SILT FENCE BACKING MAY BE USED IN LIEU OF WIRE MESH.
4. WIRE MESH WILL BE USED AT LOCATIONS SHOWN ON THE APPROVED SWPPP.

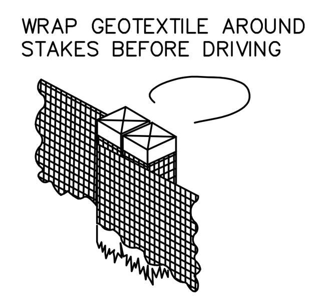

JOINING SECTIONS OF SILT FENCE

NOTE: IF FABRIC IS INSTALLED BY EQUIPMENT DESIGNED TO SLICE INTO THE GROUND, THE TRENCH IS NOT REQ'D.

CITY OF O'FALLON
ENGINEERING DEPARTMENT
O'FALLON, MISSOURI

SILT FENCE INSTALLATION SHEET FLOW (ONLY)

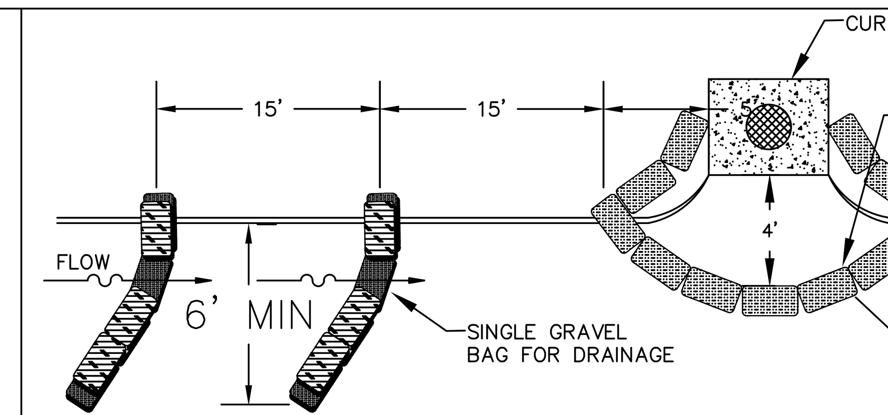

TRAP PLACEMENT AT LOW POINT

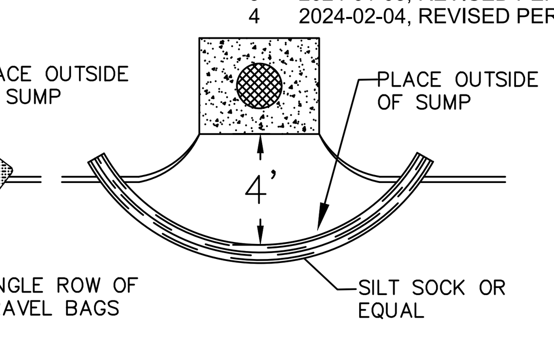

SILT SOCK
(ALTERNATIVE)

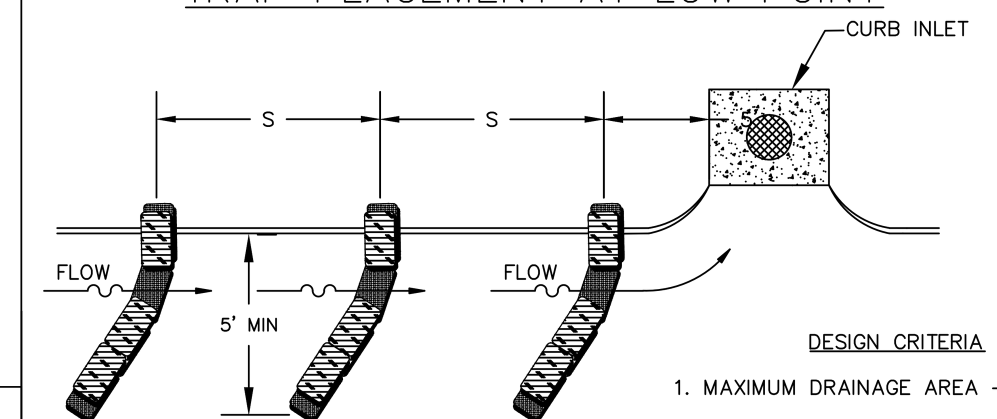

TRAP PLACEMENT AT INTERMEDIATE INLET

SPACING OF TRAPS

GUTTER SLOPE	S
LOW PT	15'
1%	20'
2%	15'
3% MAX.	10'

DESIGN CRITERIA

1. MAXIMUM DRAINAGE AREA – 1 ACRE.
2. PEAK RUNOFF SHALL BE ≤2 CFS BASED ON THE 6-MONTH STORM.
3. STACK GRAVEL BAGS DOUBLE HIGH. PROVIDE GAP FOR DRAINAGE.

CITY OF O'FALLON
ENGINEERING DEPARTMENT
O'FALLON, MISSOURI

CURB INLET PROTECTION

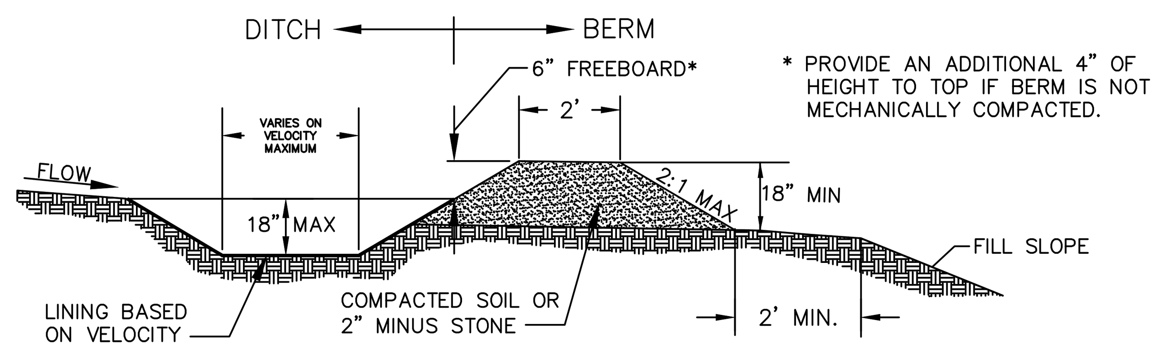

* PROVIDE AN ADDITIONAL 4" OF HEIGHT TO TOP IF BERM IS NOT MECHANICALLY COMPACTED.

DIVERSION BERM

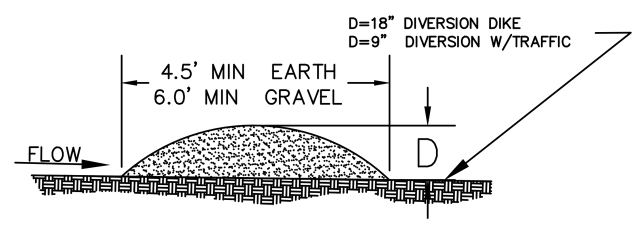

DIVERSION DIKE

DESIGN CRITERIA

1. DIVERSIONS SHALL BE USED FOR DRAINAGE AREAS ≤ 3 ACRES.
2. DIVERSION CHANNELS SHALL BE DESIGNED TO CONVEY THE 6-MO STORM AT NON-EROSIVE VELOCITIES.
3. CRITICAL LOCATIONS SHALL BE DESIGNED FOR THE 15YR / 20Min. STORM.
4. MAXIMUM CHANNEL SLOPE OF 3% WITHOUT CHECK DAMS.
5. SWALE SEDIMENT TRAPS ARE TO BE USED IN HIGHLY EROSIVE AREAS.
6. CHANNELS SHALL BE PROTECTED USING APPROPRIATE CHANNEL LINERS.
7. CHANNEL OUTLETS MUST BE STABILIZED.
8. STORM SEWERS MAY BE USED IN LIEU OF OPEN CHANNELS.

CITY OF O'FALLON
ENGINEERING DEPARTMENT
O'FALLON, MISSOURI

DIVERSION BERMS + DIKES

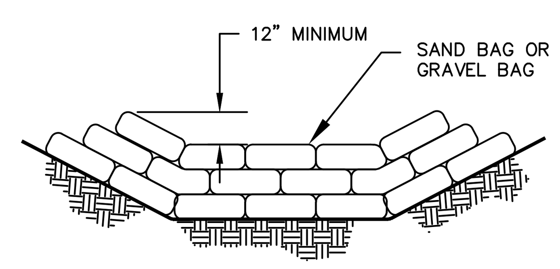

CROSS SECTION

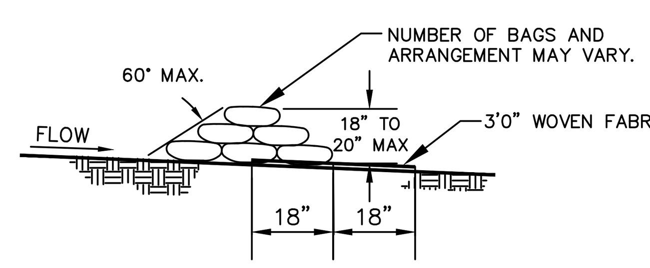

PROFILE

SAND BAG OR GRAVEL BAG CHECK DAM

LEVEL CENTER SECTION, WITH 12" RISE ON BOTH SIDES TO CAUSE FLOW OVER, NOT AROUND, CHECK DAM

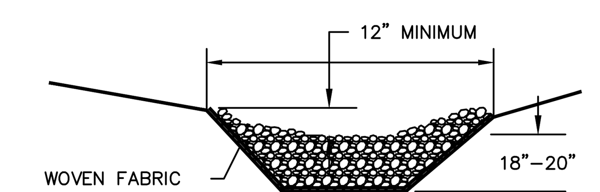

CROSS SECTION

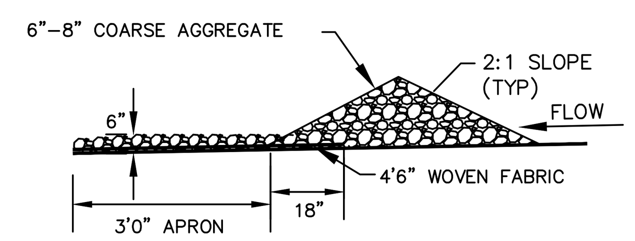

PROFILE

ROCK CHECK DAM

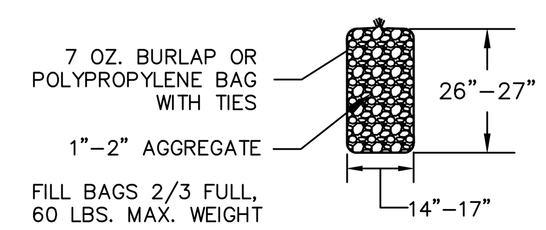

GRAVEL BAG

NOTE:
1. CHECK DAMS MAY BE CONSTRUCTED OF SEVERAL ESC CHECK DAM PRODUCTS.
2. SEE TABLE 60-12 AND ESC 1 FOR CHECK DAM SPACING.

CITY OF O'FALLON
ENGINEERING DEPARTMENT
O'FALLON, MISSOURI

CHECK DAMS

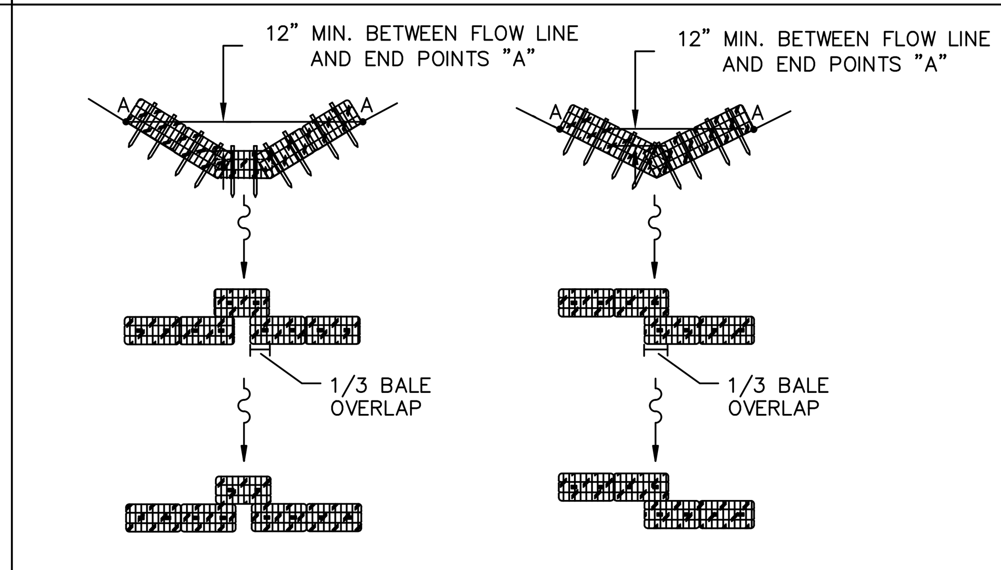

TRAPEZOIDAL DITCH

V-DITCH

CRITERIA FOR LOW CONCENTRATED FLOWS

1. DRAINAGE AREAS SHALL BE LESS THAN 1 ACRE.
2. INSTALL TWO STAKES PER BALE.
3. BALES WILL BE TRENCHED 4" DEEP INTO EARTH.
4. MAXIMUM CHANNEL SLOPE OF 3%.
5. SEDIMENTATION TRAPS TO BE USED IN HIGHLY EROSIVE AREAS.

CHECK DAM SPACING

Ditch Slope	Maximum Spacing
3%	50%
2%	75%

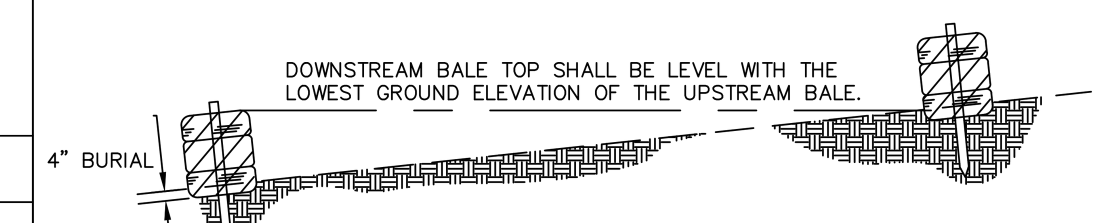

DITCH PROFILE

CITY OF O'FALLON
ENGINEERING DEPARTMENT
O'FALLON, MISSOURI

STRAW BALE CHECK DAM

CRITERIA

1. EXCAVATE TRENCH THE WIDTH OF THE BALE AT LEAST 4 INCHES DEEP AND LONG ENOUGH THAT THE END BALES ARE SOMEWHAT UPSLOPE.
2. REFER TO STRAW BALE CHECK DAM DETAIL FOR SPACING AND STRAW BALE USES AS DITCH CHECKS.
3. UPSLOPE FACE OF BALE MUST BE AT LEAST 5' FROM A DISTURBED EMBANKMENT.

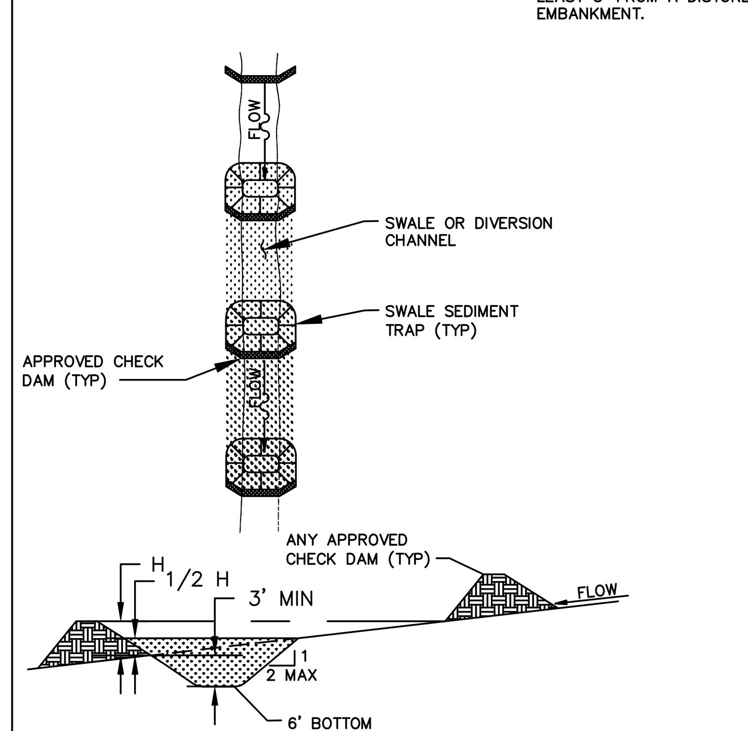

DITCH PROFILE

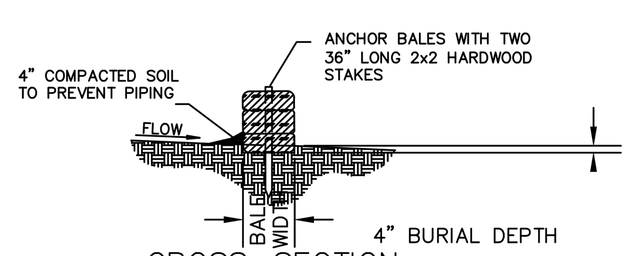

CROSS-SECTION

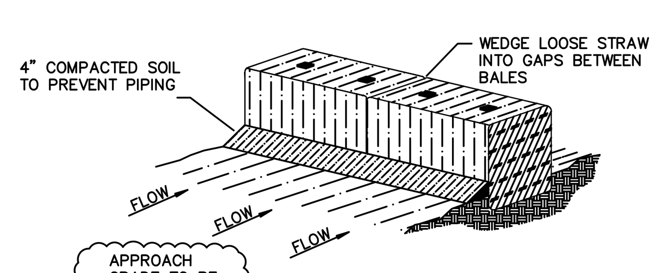

PERSPECTIVE VIEW

CITY OF O'FALLON
ENGINEERING DEPARTMENT
O'FALLON, MISSOURI

SWALE SEDIMENT TRAP
STRAW BALE BARRIER INSTALLATION

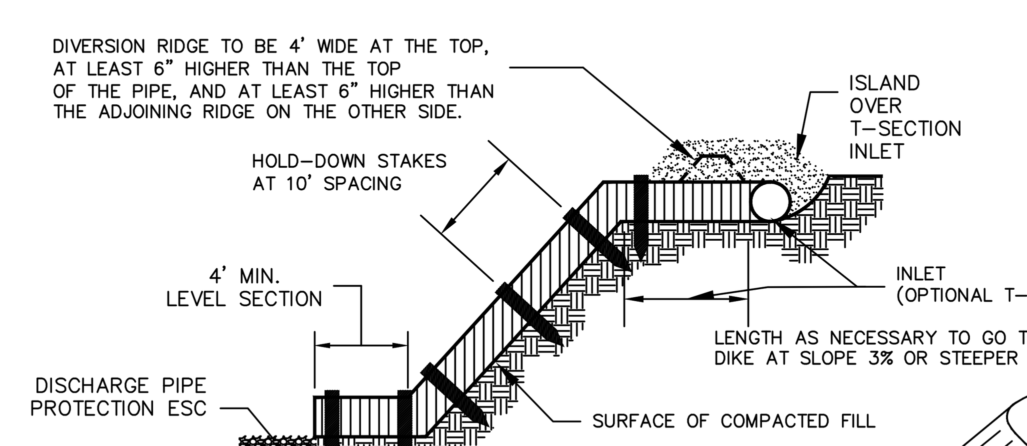

PROFILE

SLOPE DRAIN SIZE

Drainage Area (ac)	Pipe Dia.
< 1.0	12"
< 2.0	15"
< 3.0	18"
< 4.0	21"
< 5.0	24"
< 6.5	27"
6.5–10	30"

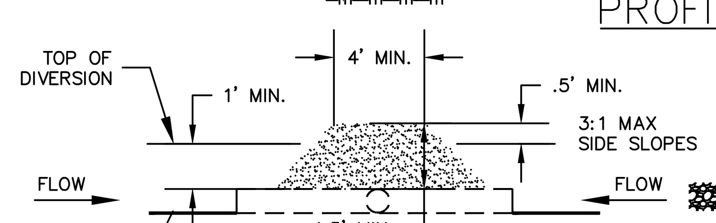

OPTIONAL T-SECTION ELEVATION

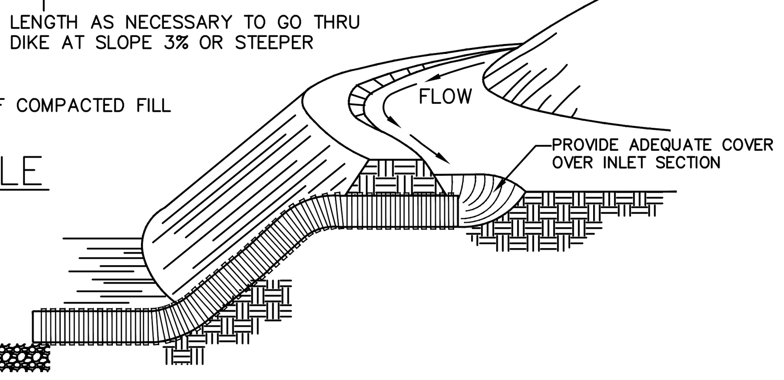

TYPICAL INSTALLATION

NOTE:

1. PIPE CAN BE CMP, PVC, FLEXIBLE TUBING, OR SIMILAR.
2. THIS METHOD MUST BE USED IN CONJUNCTION WITH OTHER ESC DEVICES. THIS IS NOT A STAND ALONE CONTROL DEVICE.

CITY OF O'FALLON
ENGINEERING DEPARTMENT
O'FALLON, MISSOURI

TEMPORARY SLOPE DRAIN

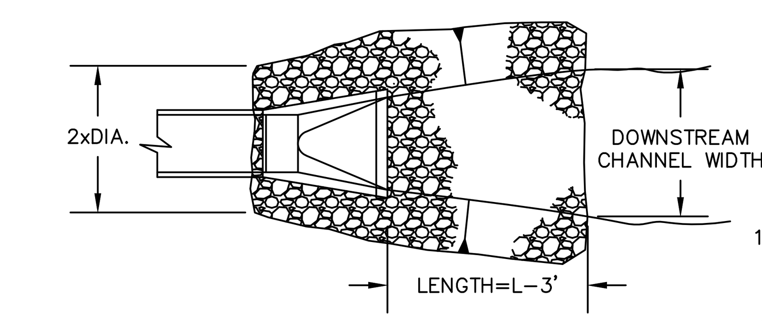

PLAN VIEW
W/FLARED END SECTION

RIPRAP SIZE & APRON DIMENSION

PIPE SIZE	VELOCITY < 5 FPS				VELOCITY < 10 FPS			
	ROCK SIZE		APRON DIM		ROCK SIZE		APRON DIM	
	d_{50}	d_{MAX}	T	L	d_{50}	d_{MAX}	T	L
(inch)	(inch)	(inch)	(inch)	(ft)	(inch)	(inch)	(inch)	(ft)
12	5	9	15	12	5	9	15	16
15	5	9	15	14	5	9	15	18
18–24	5	9	15	16	9	14	24	20
27–30	5	9	15	18	9	14	24	22
36–42	9	14	24	22	12	18	27	26
48–54	9	14	24	26	12	18	27	30
60–66	12	18	27	34	15	24	30	38
72–84	15	24	30	42	15	24	30	46
96	18	27	30	50	18	27	30	54

d_{50} – NOMINAL DIAMETER
d_{MAX} – MAXIMUM DIAMETER
T – THICKNESS
L – LENGTH

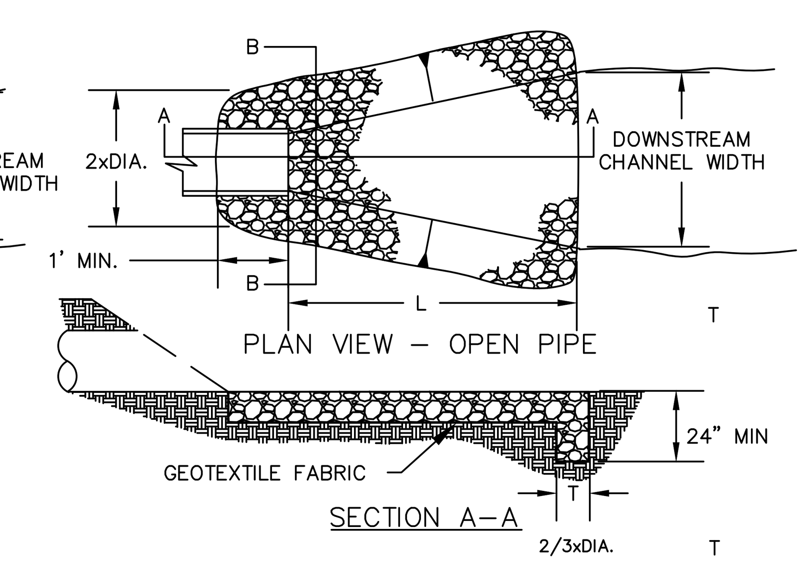

PLAN VIEW – OPEN PIPE

SECTION A–A

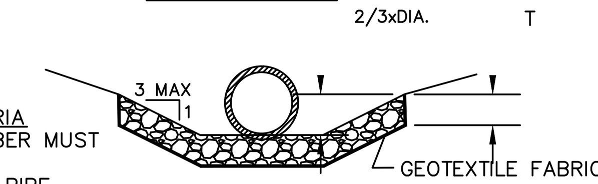

SECTION B–B

DESIGN CRITERIA

1. FROUDE NUMBER MUST BE ≤ 2.50.
2. USE 3 TIMES PIPE DIAMETER FOR DOWNSTREAM CHANNEL WIDTH IF THERE IS NO DEFINED CHANNEL.
3. BANK PROTECTION HEIGHT TO BE 2/3 TIMES PIPE DIAMETER.
4. ROCK SLOPES SHALL BE NO STEEPER THAN 3:1.

CITY OF O'FALLON
ENGINEERING DEPARTMENT
O'FALLON, MISSOURI

TEMPORARY OUTLET PIPE DISCHARGE PROTECTION

ISSUE REMARKS/DATE

ISSUE	REMARKS/DATE
1	2024-08-13, INITIAL SUBMITTAL CITY PH.2
2	~~2024-11-08, REVISED PER CITY COMMENTS~~
3	2024-01-03, REVISED PER CITY COMMENTS
4	2024-02-04, REVISED PER CITY COMMENTS

PROJECT TITLE

HARVEST AT HOPEWELL
O'Fallon, Missouri
O'FALLON PHASE 2

THE STERLING CO.
ENGINEERS & SURVEYORS
5055 New Baumgartner Road
St. Louis, Missouri 63129
Ph 314-487-0440 Fax 314-487-8944
www.sterling-eng-sur.com
Corporate Certificate of Authority #001348

The Professional Engineer's seal and signature affixed to this sheet applies only to the material and items shown on this sheet. All drawing, instruments or other documents not exhibiting this seal and signature shall not be considered prepared by this engineer, and the engineer expressly disclaims any and all responsibility for such plans, drawings or documents not exhibiting this seal and signature.

STATE OF MISSOURI
MICHAEL G. BOERDING
NUMBER
E-28643
PROFESSIONAL ENGINEER

Date: 02-04-2025
Michael G. Boerding
License No. MO E-28643
Professional Engineer

HARVEST HOPEWELL, LLC
5091 New Baumgartner Road
St. Louis, Missouri 63129

EROSION CONTROL DETAILS

P+Z No. 21-004994
City No. 21-011444
Date: 02-04-2025
Job No. 20-09-327

Page No.
DTL-1
IMP

"FINAL PLAN" Approval Date: Dec. 16, 2021

Drawing name: V:\2009327 Highway N Assemblage\Drawings\Engineering\Improvements\9327 IMP DETAILS.dwg Plotted on: Feb 04, 2025 - 9:26am Plotted by: jluetkenhaus