NOTES:

1) INLETS ON THIS SHEET ARE TO BE USED IN LOCATIONS WHERE STANDARD OPEN THROAT INLETS CAN NOT BE USED IN PAVED TRAFFIC WAY AND IN LIMITED EASEMENTS.
2) STANDARD DEPTH = 4.0 FEET.
3) ADJUSTMENTS SHALL BE MADE WITH PRECAST ADJUSTMENT RINGS AND APPROVED BITUMINOUS SEALANT.

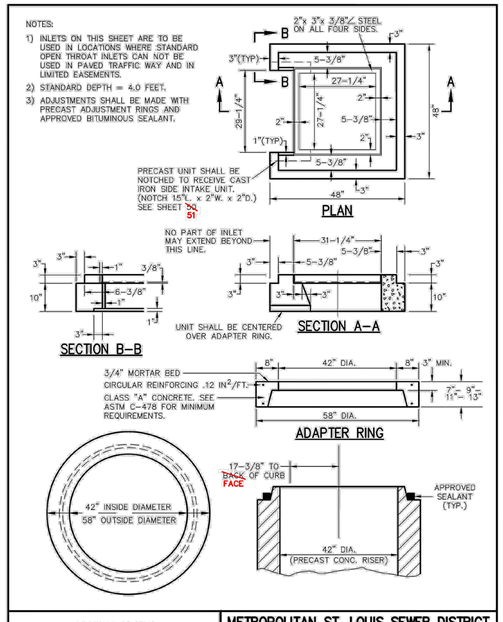

GRATE SEAT FOR 2 GRATE INLET WITH SIDE INTAKE

METROPOLITAN ST. LOUIS SEWER DISTRICT
Standard Details of Sewer Construction

Dr. WSH/MCK Ch. PWS | ~~2009~~ 2014 | SHEET 32 Revised

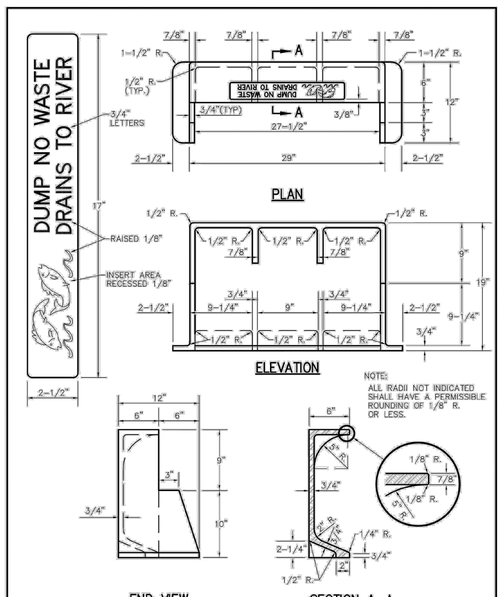

CAST IRON SIDE INTAKE UNIT FOR GRATED INLETS
249 LBS.

METROPOLITAN ST. LOUIS SEWER DISTRICT
Standard Details of Sewer Construction

Dr. RGW/SAM Ch. J.C.K. | 2009 | SHEET 51

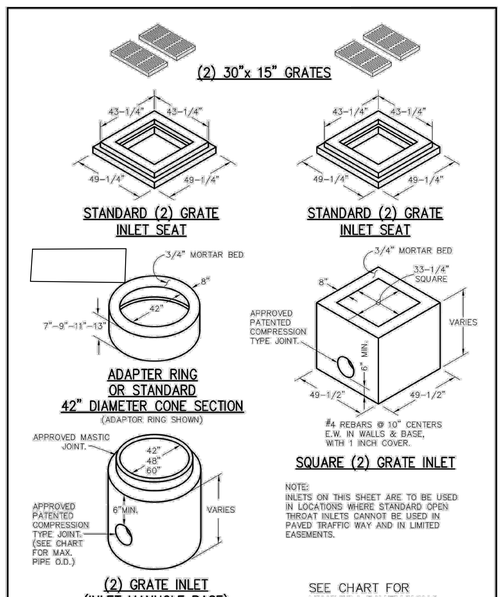

2 GRATE INLETS PRECAST CONCRETE

METROPOLITAN ST. LOUIS SEWER DISTRICT
Standard Details of Sewer Construction

Dr. JLG/SAM Ch. J.C.K. | 2009 | SHEET 35

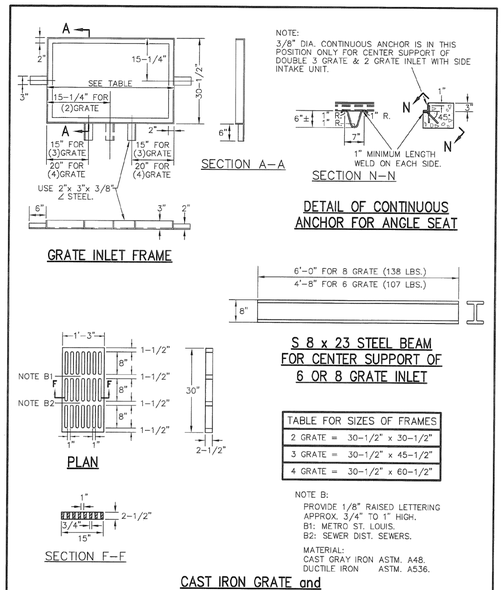

DETAILS OF INLET FRAME AND GRATES

METROPOLITAN ST. LOUIS SEWER DISTRICT
Standard Details of Sewer Construction

DR. RGW/SAM Ch. J.C.K. | 2009 | SHEET 47 (REVISED)

CALL	USE	a	STRAIGHT BARS
G–1	2, 3, OR 4 GRATE	3'–4"	
G–2	6 & 8 GRATE	5'–10"	
H–2	2 GRATE		3'–6"
H–3	3 & 6 GRATE		4'–9"
H–4	4 & 8 GRATE		6'–0"

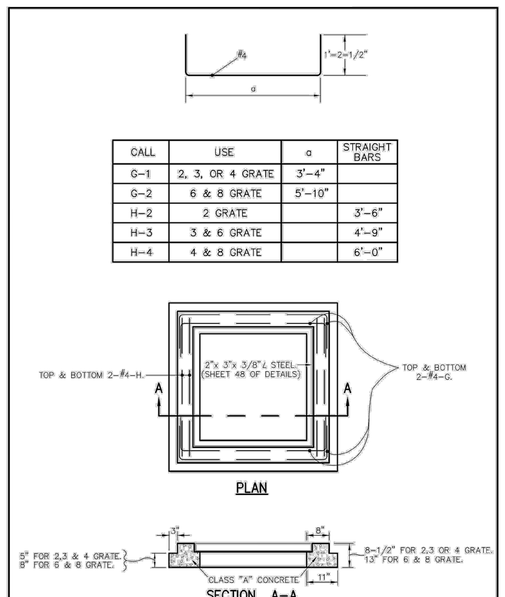

STEEL REQUIREMENTS FOR GRATE INLET SEAT

METROPOLITAN ST. LOUIS SEWER DISTRICT
Standard Details of Sewer Construction

Dr. WSH/SAM Ch. J.C.K. | 2009 | SHEET 50

PREMIER DESIGN GROUP
100 MIDLAND PARK DRIVE
WENTZVILLE, MO 63385
MISSOURI CERTIFICATE OF AUTHORITY #2009000031
MISSOURI CERTIFICATE OF AUTHORITY #S-2002007849

STATE OF MISSOURI
STEVEN MARION NUMBER 2006007195
PROFESSIONAL ENGINEER

ENGINEERS AUTHENTICATION

The responsibility for professional engineering liability on this project is hereby limited to the set of plans authenticated by the seal, signature, and date hereunder attached. Responsibility is disclaimed for all other engineering plans unless the undersigned specifically excludes revisions after this date, unless otherwise stated.

STEVEN D. MARION P.E.
PROFESSIONAL ENGINEER
PE 2006007195

Project
NOLES PROPERTIES LLC
LOT 5 - HEARTLAND DENTAL
956 BRYAN ROAD
O'FALLON, MO 63366
NOLES PROPERTIES
11361 OLIVE BLVD
CREVE COEUR, MO 63141

Date 10/6/2023

#	Revision Date	Description of Changes
1	11/4/2023	REVISED PER CITY COMMENTS
2	11/14/2023	REVISED PER CITY COMMENTS

Sheet Title
STORM SEWER DETAILS

Sheet Number
C-701

Project No.	2202920
Drawn By	C. KILE
Checked By	M. FOGARTY

PERMIT SET

\\Vault-pc\vault\CIVIL 3D PROJECTS\2022\2202920 Noles Bryan Rd Commercial Dev\ENGINEERING\LOT 5-HEARTLAND\SHEETS\C-701 STORM SEWER DETAILS.dwg