HIGHGROVE PLACE (SOUTH PORTION)
CONSTRUCTION DETAILS

MAY, 1996
Job No. 95-067
REV. 7-10-96 CITY COMMENTS

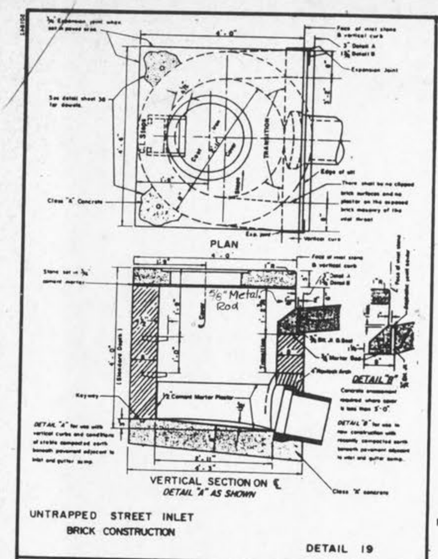

UNTRAPPED STREET INLET
BRICK CONSTRUCTION

DETAIL 19

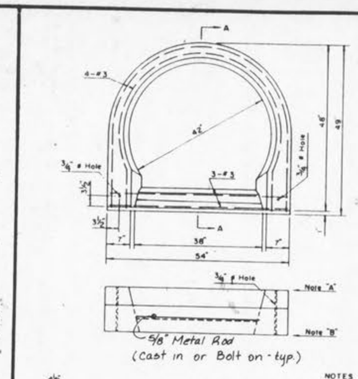

NOTES

A. Set standard inlet stone on 3/4" mortar bed and dowel with 5/8" ø 1'-0" long pins and grout.
B. Raise to final grade with courses of brick and 3/4" mortar bed.
C. This unit to be used with, 42" I.D., poured in place concrete or brick base.
D. 4000 P.S.I. concrete required.

PRE-CAST CONCRETE UNIT
FOR
SINGLE CURB INLET

DETAIL 20

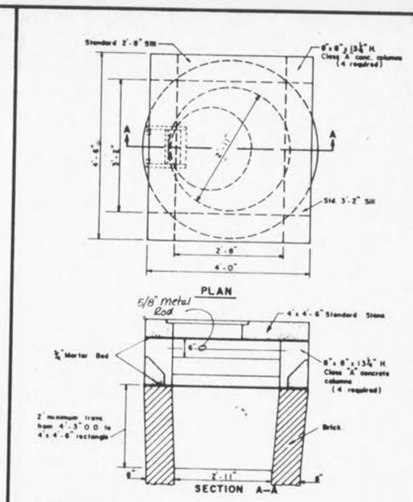

BRICK AREA INLET
OPEN 4 SIDES

DETAIL 21

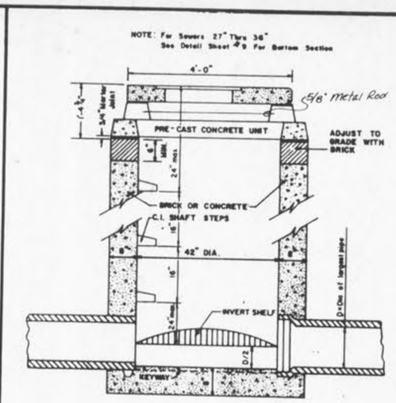

AREA INLET
(12" thru 24")

DETAIL 22

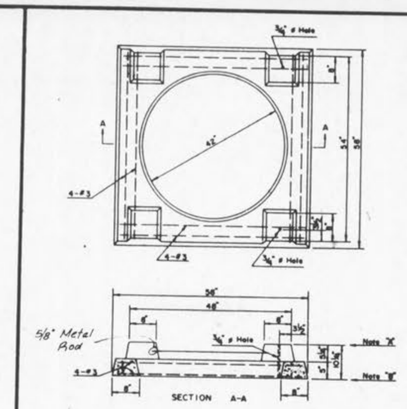

4000 P.S.I. concrete required.

NOTES

A. Set standard inlet stone in 3/4" mortar bed and dowel with 5/8" ø 1'-0" long pins and grout.
B. Raise to final grade with courses of brick & set the unit to base with 3/4" mortar bed.
C. This unit to be used with, 42" I.D., poured in place concrete or brick base.

PRE-CAST CONCRETE UNIT
FOR
4 WAY AREA INLET

DETAIL 23

DETAIL 24

CONCRETE DOUBLE STREET INLET
W/PRE CAST TOP UNIT

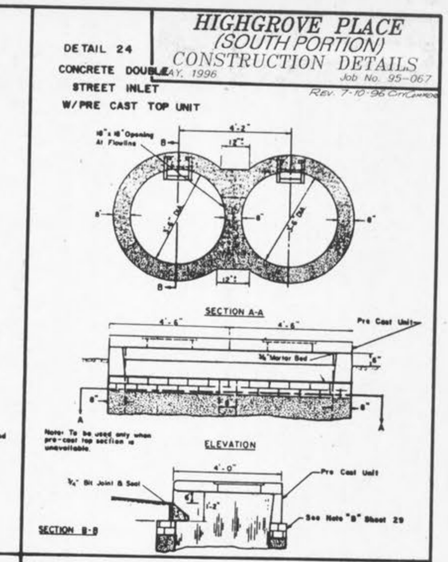

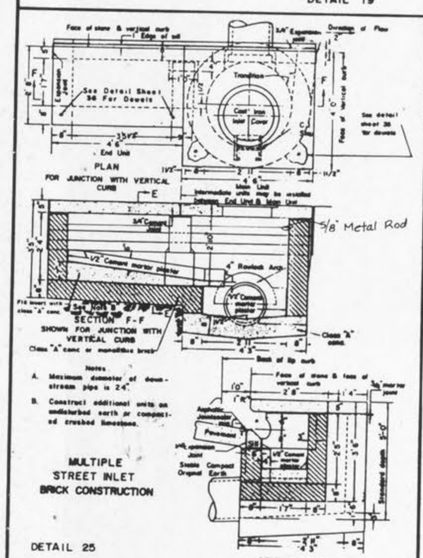

Notes

A. Maximum diameter of downstream pipe is 24".
B. Construct additional units on undisturbed earth or compacted crushed limestone.

MULTIPLE
STREET INLET
BRICK CONSTRUCTION

DETAIL 25

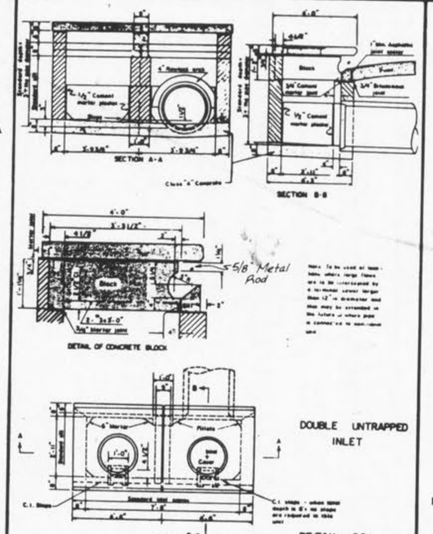

DOUBLE UNTRAPPED
INLET

DETAIL 26

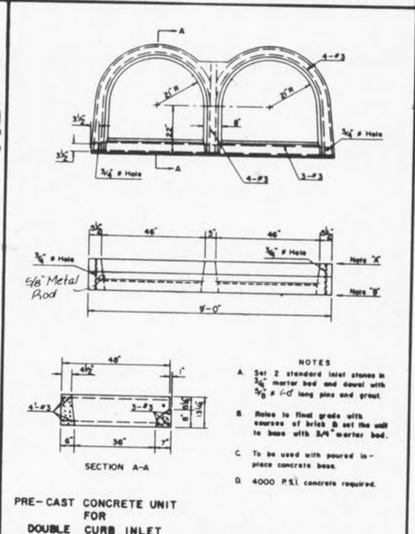

NOTES

A. Set 2 standard inlet stones in 3/4" mortar bed and dowel with 5/8" ø 1'-0" long pins and grout.
B. Raise to final grade with courses of brick & set the unit to base with 3/4" mortar bed.
C. To be used with poured in-place concrete base.
D. 4000 P.S.I. concrete required.

PRE-CAST CONCRETE UNIT
FOR
DOUBLE CURB INLET
(WITH CONCRETE BASE)

DETAIL 27

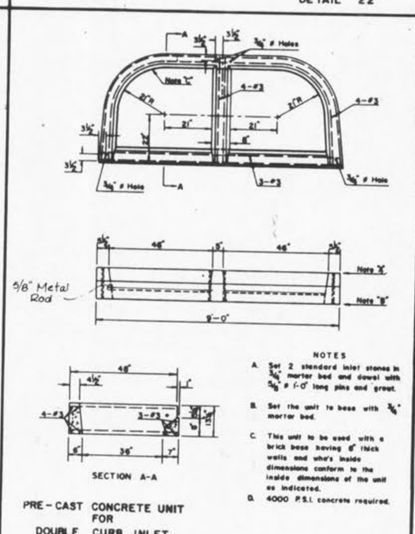

NOTES

A. Set 2 standard inlet stones in 3/4" mortar bed and dowel with 5/8" ø 1'-0" long pins and grout.
B. Set the unit to base with 3/4" mortar bed.
C. This unit to be used with a brick base having 8" thick walls and who's inside dimensions conform to the inside dimensions of the unit as indicated.
D. 4000 P.S.I. concrete required.

PRE-CAST CONCRETE UNIT
FOR
DOUBLE CURB INLET
(WITH BRICK BASE)

DETAIL 28

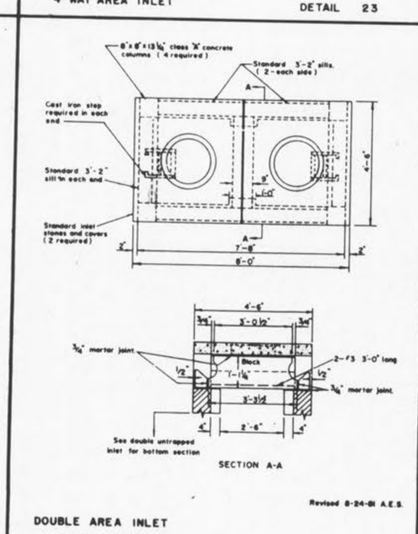

Revised 8-24-01 A.E.S.

DOUBLE AREA INLET
OPEN 4 SIDES

DETAIL 29

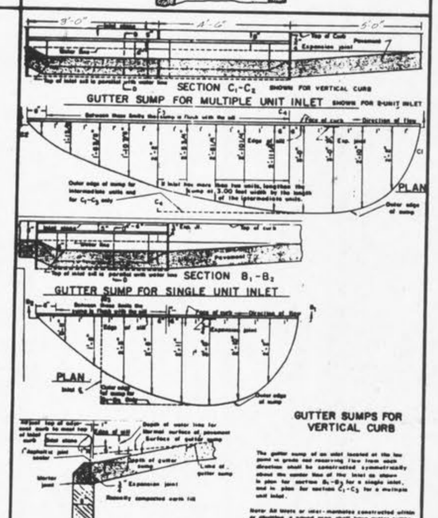

DETAIL 30

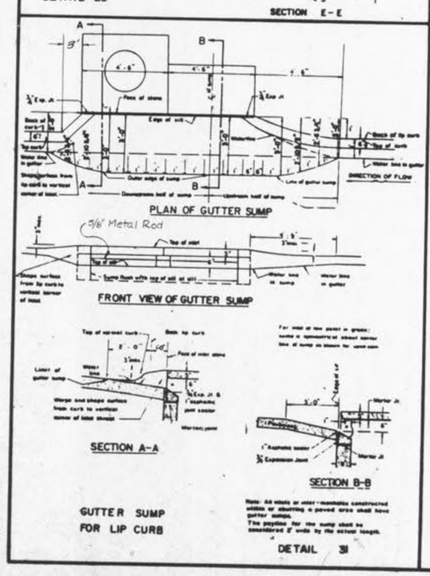

GUTTER SUMP
FOR LIP CURB

DETAIL 31

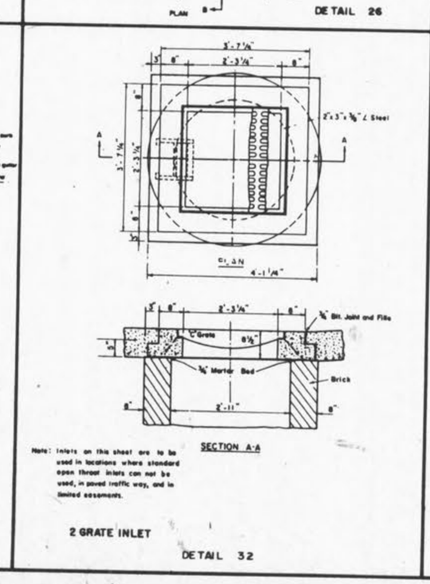

Note: Inlets on this sheet are to be used in locations where standard open throat inlets can not be used, in paved traffic way, and in limited easements.

2 GRATE INLET

DETAIL 32

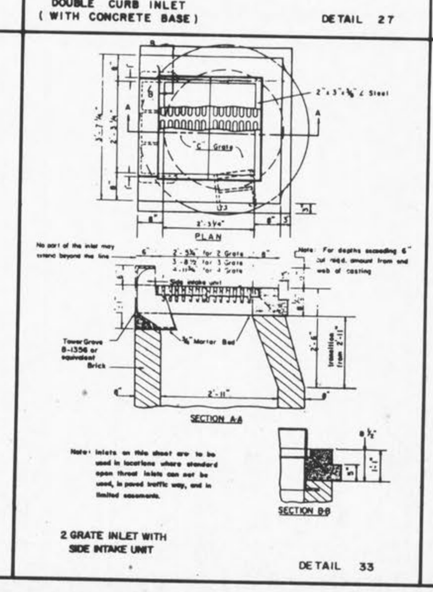

Note: Inlets on this sheet are to be used in locations where standard open throat inlets can not be used, in paved traffic way, and in limited easements.

2 GRATE INLET WITH
SIDE INTAKE UNIT

DETAIL 33

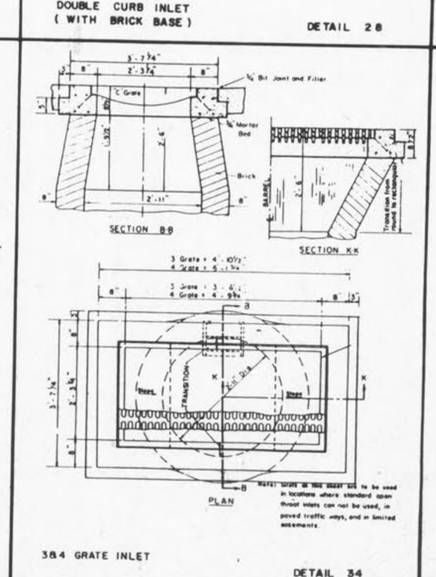

Note: Inlets on this sheet are to be used in locations where standard open throat inlets can not be used, in paved traffic ways, and in limited easements.

3&4 GRATE INLET

DETAIL 34

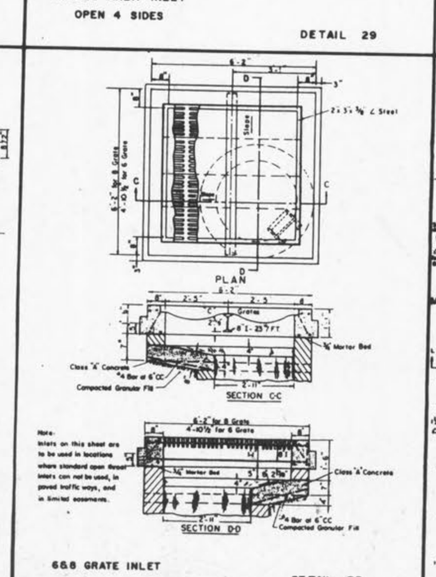

Note: Inlets on this sheet are to be used in locations where standard open throat inlets can not be used, in paved traffic ways, and in limited easements.

6&8 GRATE INLET

DETAIL 35

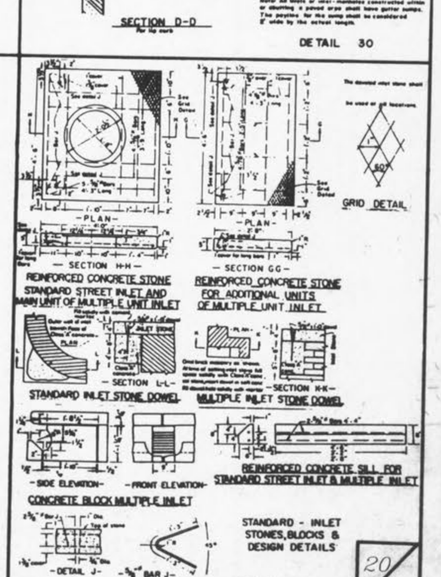

STANDARD - INLET
STONES, BLOCKS &
DESIGN DETAILS

DETAIL 36

20/23

City of O'Fallon, MO.