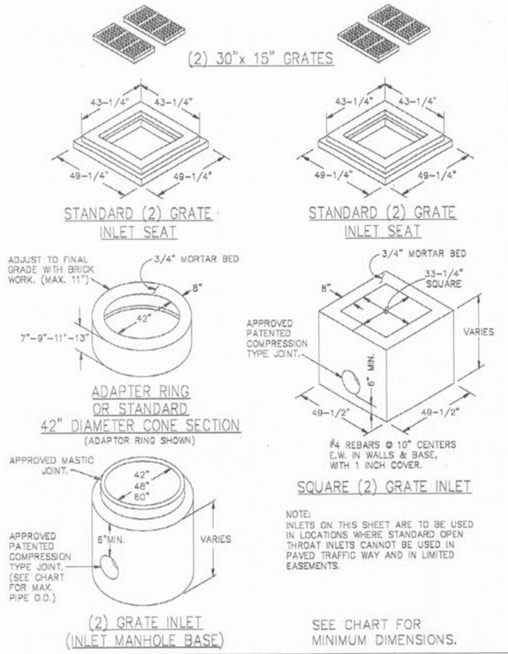

NOTE:
INLETS ON THIS SHEET ARE TO BE USED IN LOCATIONS WHERE STANDARD OPEN THROAT INLETS CANNOT BE USED IN PAVED TRAFFIC WAY AND IN LIMITED EASEMENTS.

2 GRATE INLETS PRECAST CONCRETE	METROPOLITAN ST. LOUIS SEWER DISTRICT *Standard Details of Sewer Construction*		
	Dr. JLG/SAM Ch. J.C.K.	2009	SHEET 35

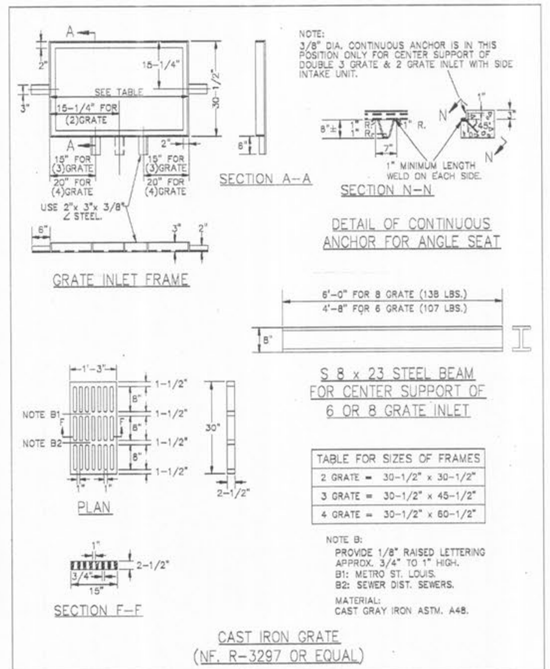

TABLE FOR SIZES OF FRAMES
2 GRATE = 30-1/2" x 30-1/2"
3 GRATE = 30-1/2" x 45-1/2"
4 GRATE = 30-1/2" x 60-1/2"

NOTE B:
PROVIDE 1/8" RAISED LETTERING APPROX. 3/4" TO 1" HIGH.
B1: METRO ST. LOUIS.
B2: SEWER DIST. SEWERS.
MATERIAL:
CAST GRAY IRON ASTM. A48.

DETAILS OF INLET FRAME AND GRATES	METROPOLITAN ST. LOUIS SEWER DISTRICT *Standard Details of Sewer Construction*		
	DR. RGW/SAM Ch. J.C.K.	2009	SHEET 47

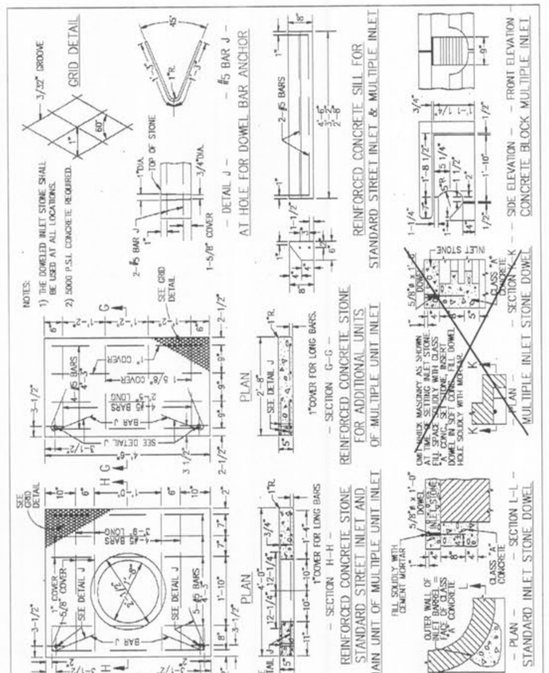

STANDARD – INLET STONES, BLOCKS & DESIGN DETAILS	METROPOLITAN ST. LOUIS SEWER DISTRICT *Standard Details of Sewer Construction*		
	Dr. WSH/SAM Ch. J.C.K.	2009	SHEET 44

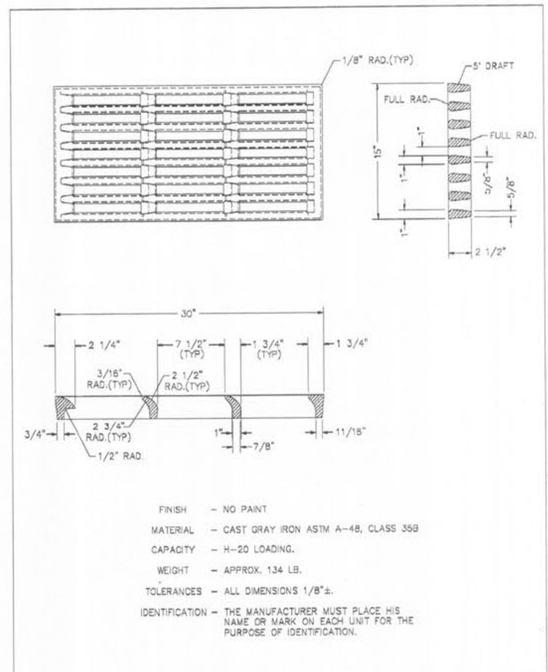

FINISH – NO PAINT
MATERIAL – CAST GRAY IRON ASTM A-48, CLASS 35B
CAPACITY – H-20 LOADING.
WEIGHT – APPROX. 134 LB.
TOLERANCES – ALL DIMENSIONS 1/8"±.
IDENTIFICATION – THE MANUFACTURER MUST PLACE HIS NAME OR MARK ON EACH UNIT FOR THE PURPOSE OF IDENTIFICATION.

DETAIL OF STEEL VANE GRATE	METROPOLITAN ST. LOUIS SEWER DISTRICT *Standard Details of Sewer Construction*		
	Dr. M.C.K. Ch. P.W.S.	2009	SHEET 49

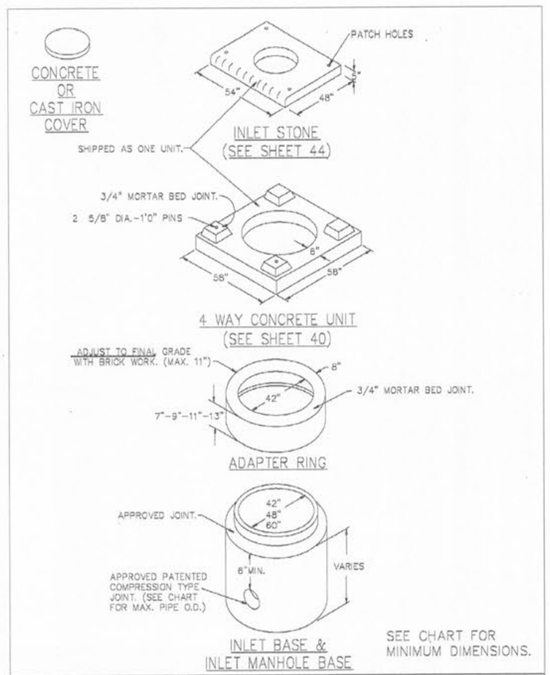

AREA INLET PRECAST CONCRETE	METROPOLITAN ST. LOUIS SEWER DISTRICT *Standard Details of Sewer Construction*		
	Dr. JLG/SAM Ch. J.C.K.	2009	SHEET 34

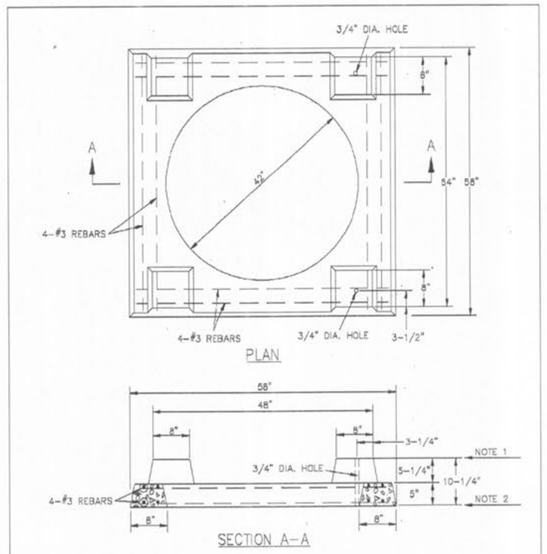

NOTES:
1) SET STANDARD INLET STONE IN 3/4" MORTAR BED AND DOWEL WITH 5/8" DIA. 1'-0" LONG PINS AND GROUT.
2) RAISE TO FINAL GRADE WITH COURSES OF BRICK AND SET THE UNIT TO BASE WITH 3/4" MORTAR BED.
3) THIS UNIT TO BE USED WITH 42 INCH I.D. BASE.
4) 5000 P.S.I. CONCRETE IS REQUIRED.

PRECAST CONCRETE UNIT FOR 4 WAY AREA INLET	METROPOLITAN ST. LOUIS SEWER DISTRICT *Standard Details of Sewer Construction*		
	Dr. DAB/SAM Ch. J.C.K.	2009	SHEET 40

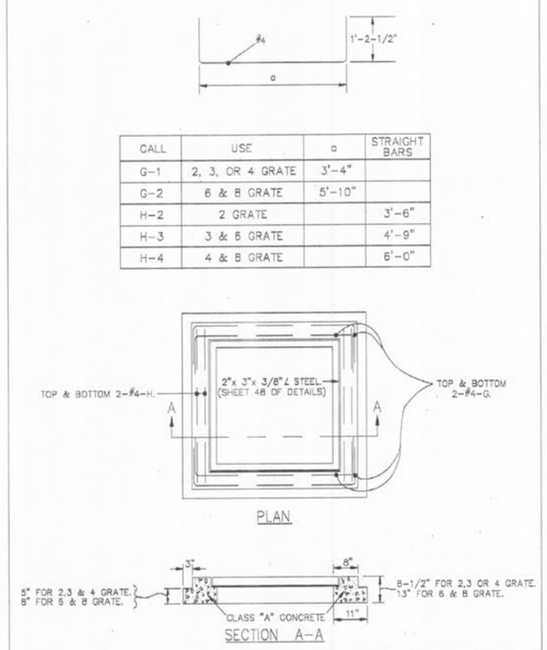

CALL	USE	a	STRAIGHT BARS
G-1	2, 3, OR 4 GRATE	3'-4"	
G-2	6 & 8 GRATE	5'-10"	
H-2	2 GRATE		3'-6"
H-3	3 & 6 GRATE		4'-9"
H-4	4 & 8 GRATE		6'-0"

STEEL REQUIREMENTS FOR GRATE INLET SEAT	METROPOLITAN ST. LOUIS SEWER DISTRICT *Standard Details of Sewer Construction*		
	Dr. WSH/SAM Ch. J.C.K.	2009	SHEET 50

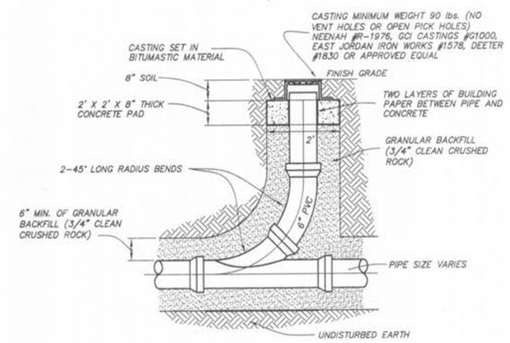

STANDARD STORM SEWER CLEANOUT
NOT TO SCALE

NOTE:
A 5/8" TRASH BAR SHALL BE CENTERED WITHIN THE OPENINGS OF ALL INLETS.

PLANNING & DEVELOPMENT #1709.03 APPROVED JANUARY 7, 2010

STATE OF MISSOURI — MATTHEW AARON KRIETE — NUMBER PE-2007002811 — PROFESSIONAL ENGINEER — 6/4/10

STORM SEWER DETAILS

HILLMANN PLACE

ST. CHARLES COUNTY, O'FALLON, MISSOURI

Surveyed: –
Drawn: BR
Checked: MK

Engineering Surveys & Services
1113 Fay Street
Columbia, Missouri
573 - 449 - 2646
Missouri Engineering Corporation # 2004005018

Revised

MATTHEW A. KRIETE
PROFESSIONAL ENGINEER
PE-2007002811

Scale	Date	Job	Sheet
AS SHOWN	JUNE 4, 2010	11481	C122