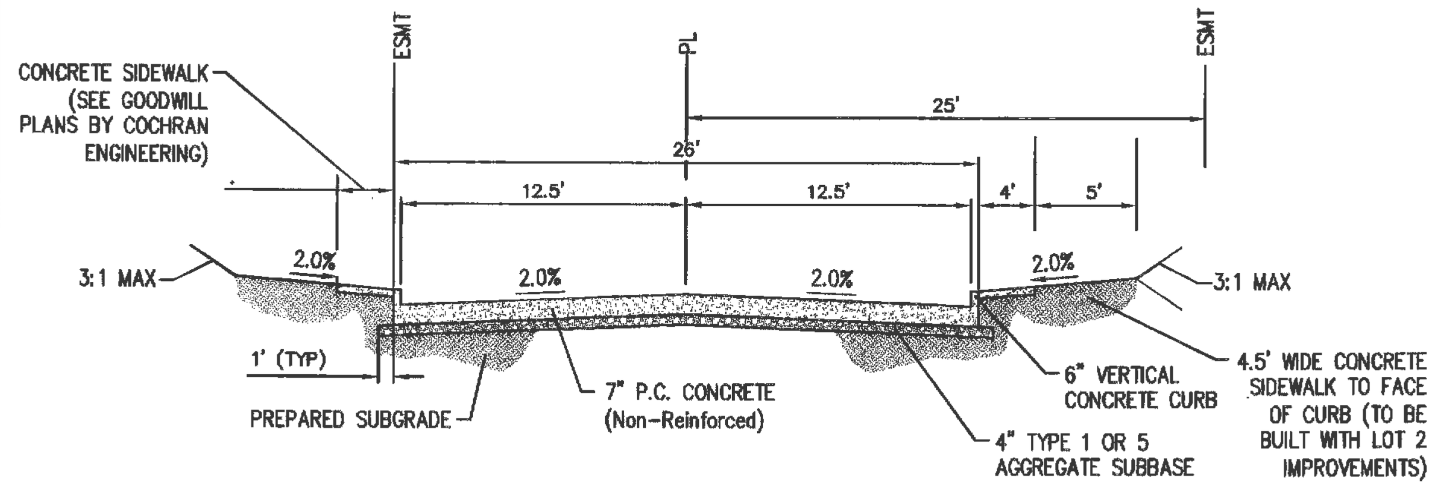

TYPICAL SECTION–ACCESS DRIVE
(Private Drive)

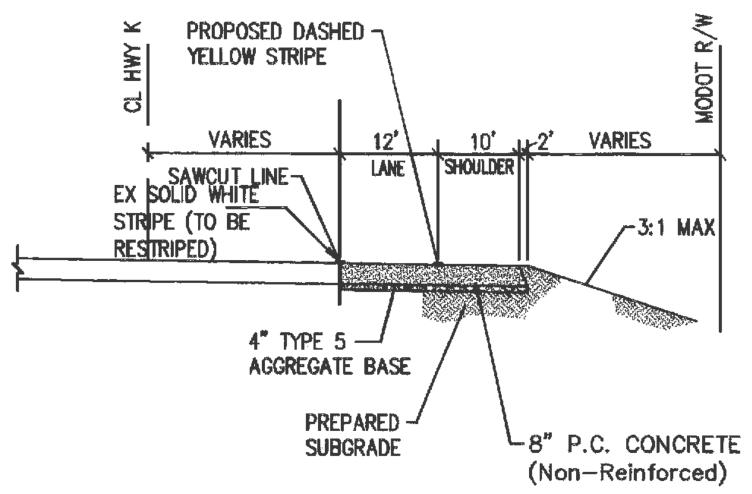

HIGHWAY K
TYPICAL PAVEMENT
WIDENING SECTION

THE ASPHALT SURFACE SHALL BE COMPACTED TO 98% MAXIMUM DENSITY

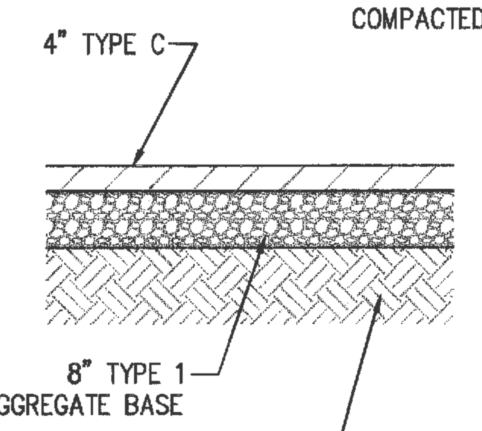

ASPHALT COMMERCIAL ENTRANCE DETAIL
CONSTRUCTION BEYOND RIGHT-OF-WAY (O'FALLON CENTER ENTRANCE)
NOT TO SCALE

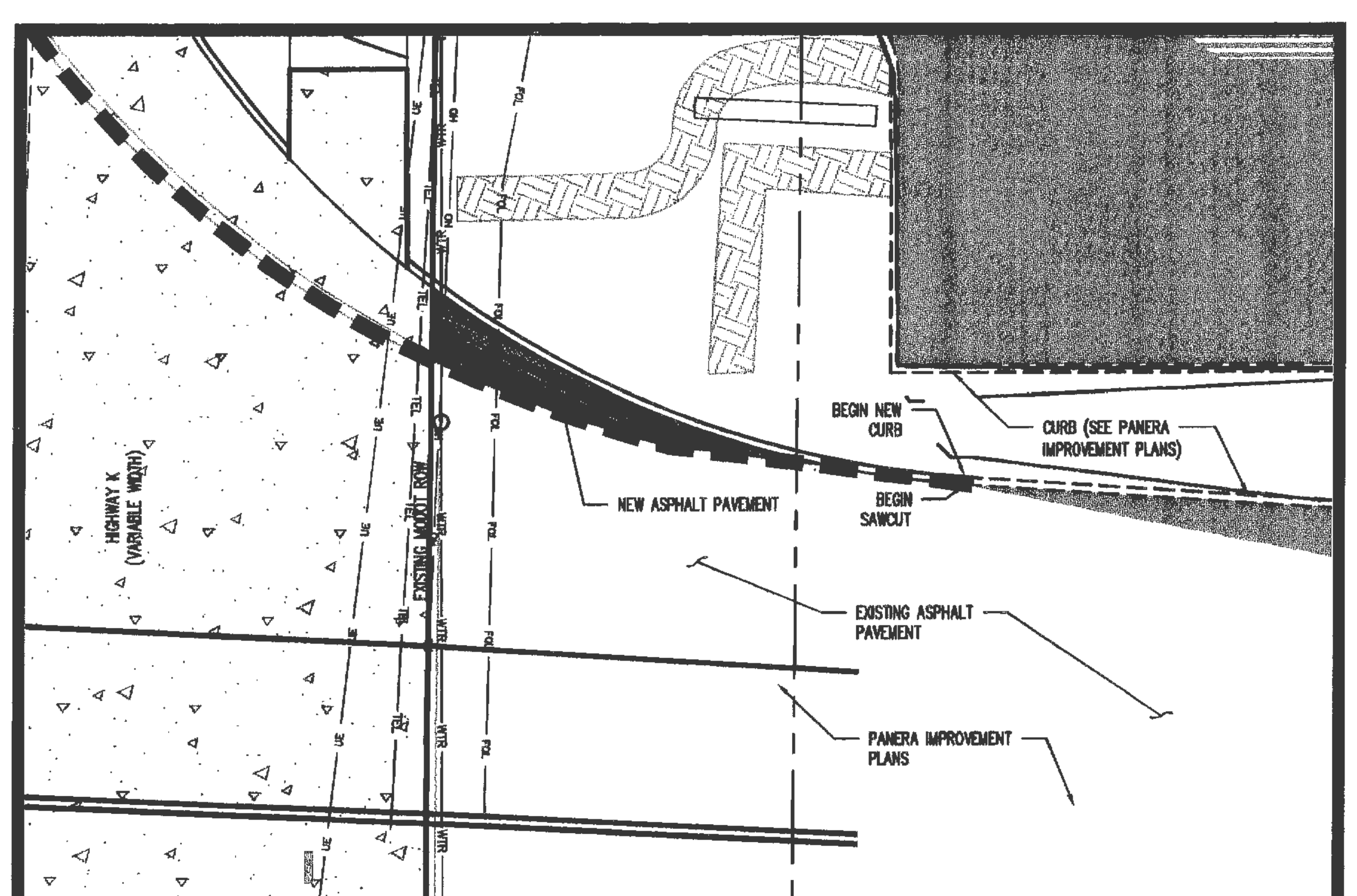

ASPHALT COMMERCIAL ENTRANCE
CONSTRUCTION BEYOND RIGHT-OF-WAY (PANERA ENTRANCE)
SCALE: 1"=10'

TEMPORARY ASPHALT CURB

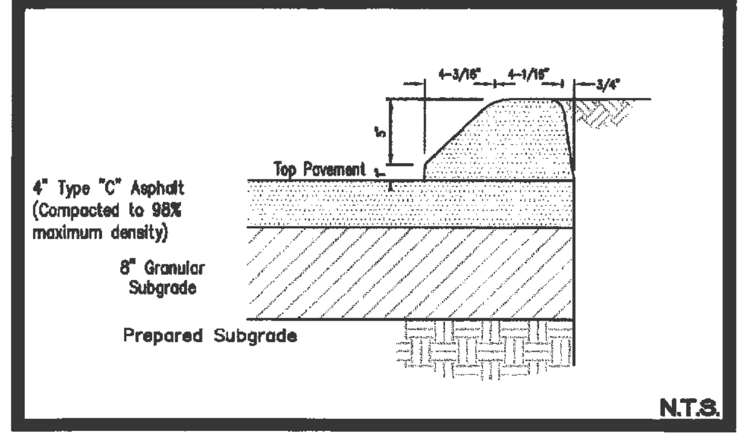

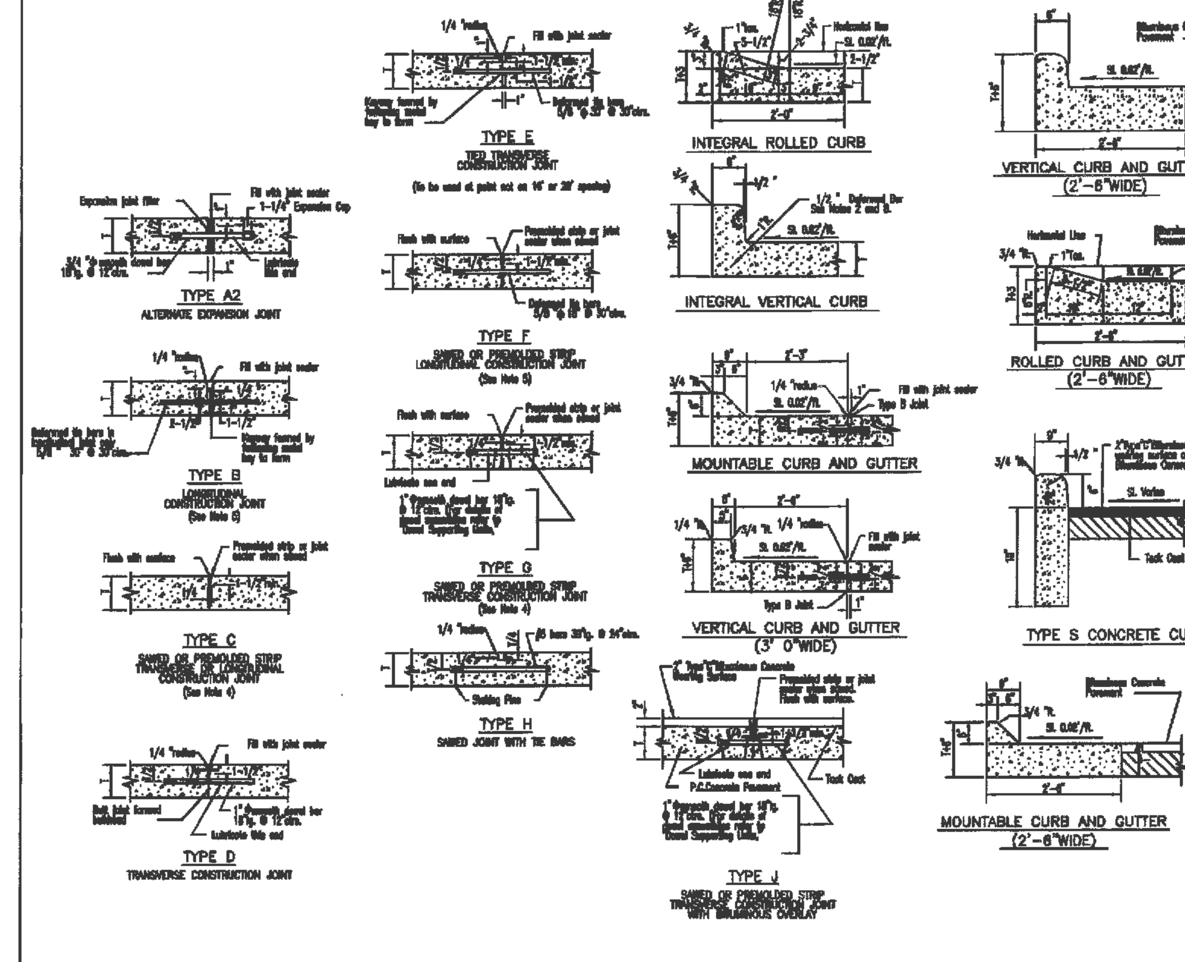

CITY OF O'FALLON
ENGINEERING DEPARTMENT
O'FALLON, MISSOURI

PAVEMENT CONSTRUCTION DETAILS
JOINTS AND CURBS

INTEGRAL VERTICAL CURB AND CONCRETE JOINT DETAILS

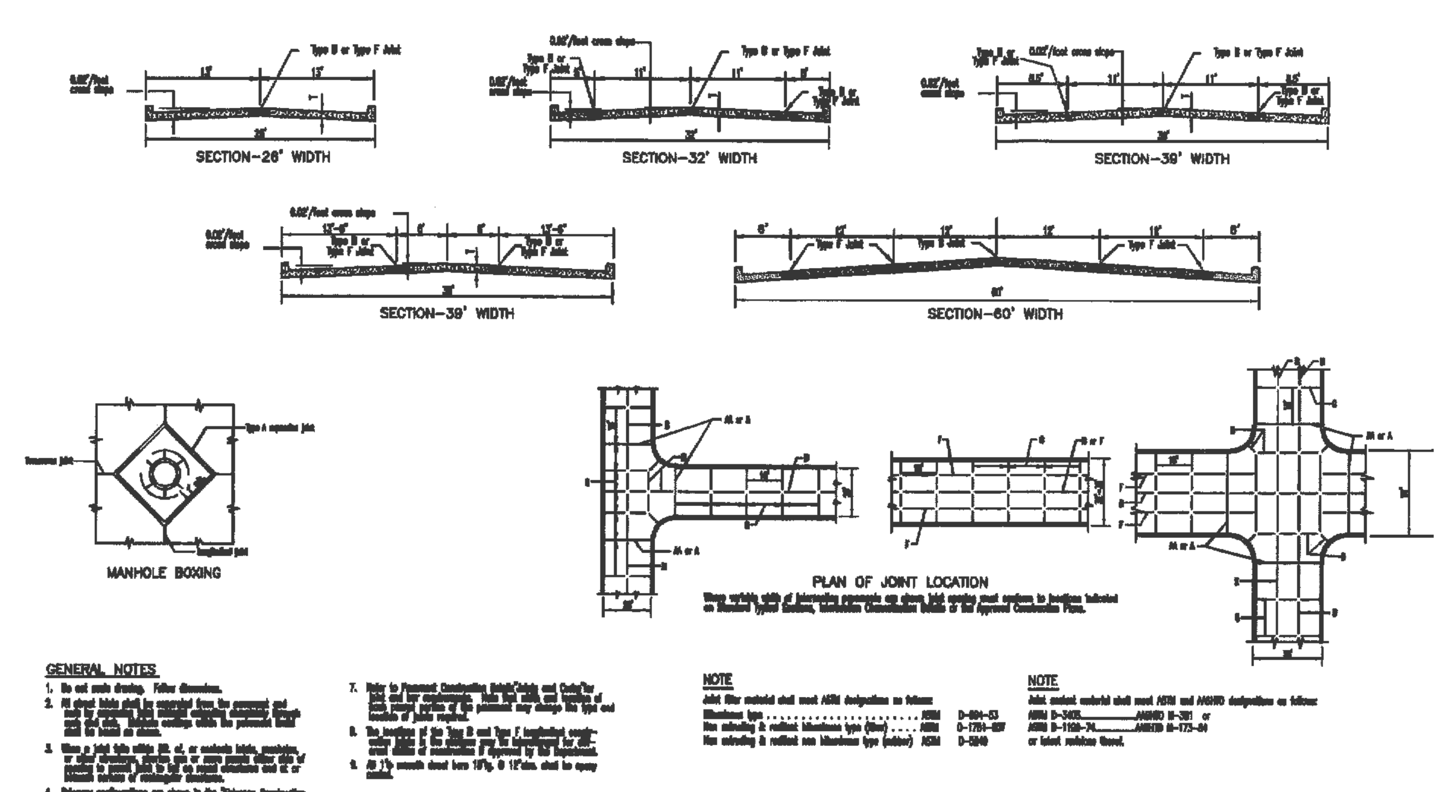

JOINT REQUIREMENTS FOR CONCRETE PAVEMENT		
STREET	JOINT TYPE	JOINT AND BAR REQUIREMENTS
All Arterial, Non-Residential	Transverse	TYPE G 1¼ smooth dowel bars 18"lg. @ 12" ctrs.
26'-61' wide pavement	Longitudinal	TYPE F / TYPE B [illegible]
7"-8" thick concrete	Expansion	TYPE A or Type A Modified

CITY OF O'FALLON
ENGINEERING DEPARTMENT
O'FALLON, MISSOURI

PAVEMENT CONSTRUCTION DETAILS
INTEGRAL VERTICAL CURB
AND CONCRETE PAVEMENT
TYPICAL SECTIONS AND DETAILS

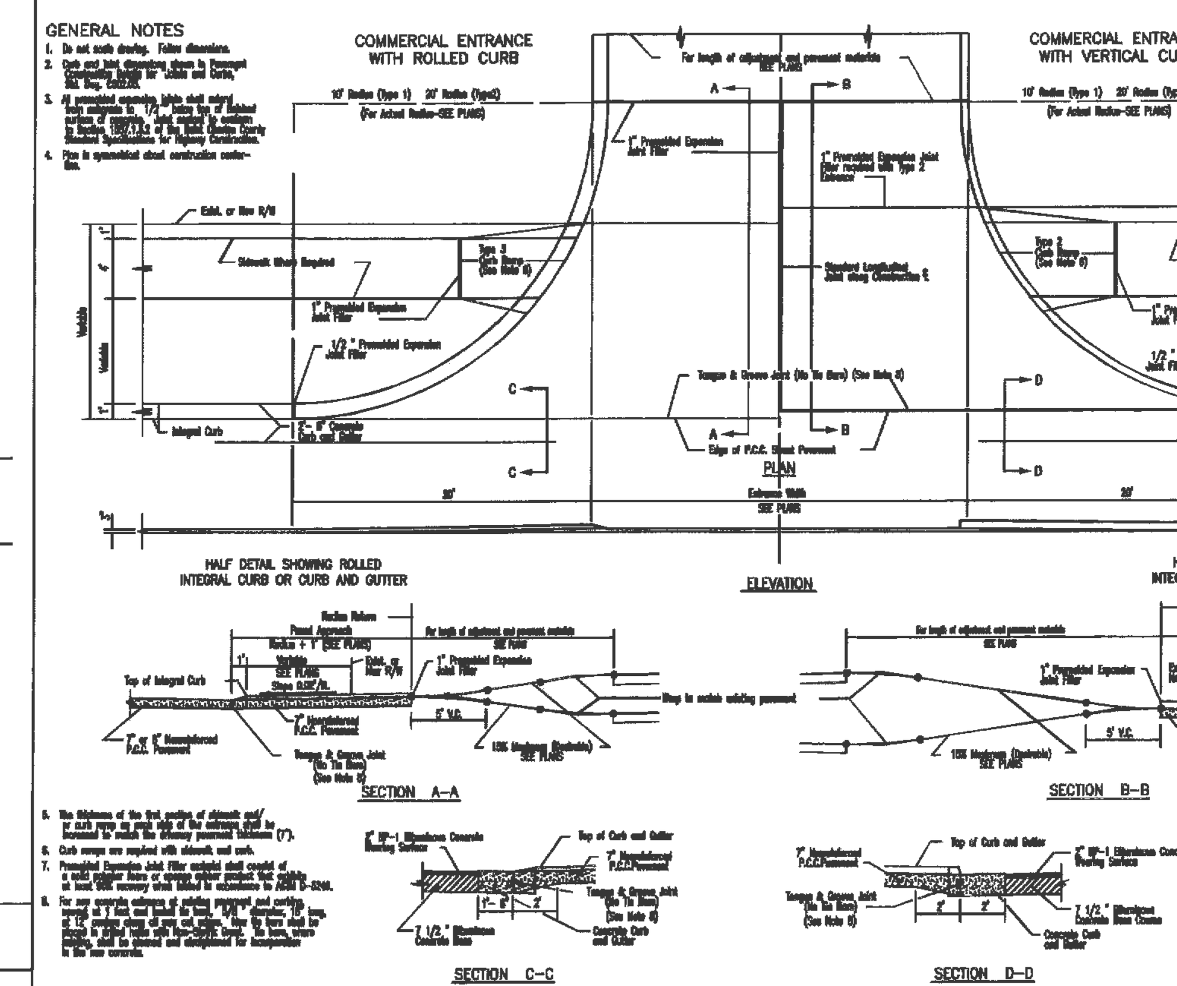

CITY OF O'FALLON
ENGINEERING DEPARTMENT
O'FALLON, MISSOURI

ENTRANCE CONSTRUCTION DETAILS
TYPE 1 & 2 SPECIAL
COMMERCIAL
CONCRETE ENTRANCES

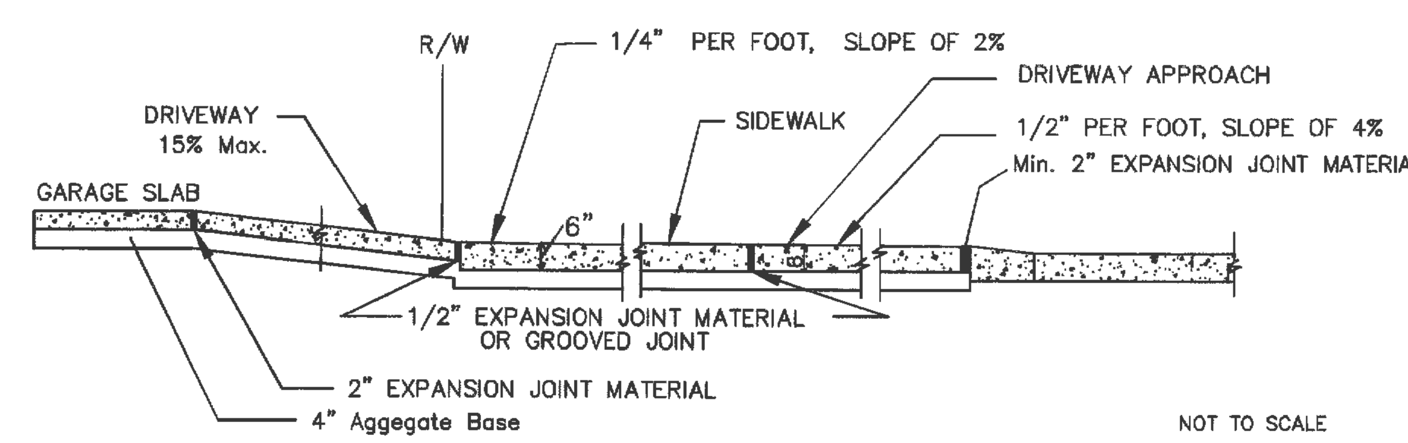

NOT TO SCALE

NOTES:
1. All driveway entrances shall be six (6) inches P.C.C. in depth from the curb to the property line.
2. All driveway approaches constructed in conjunction with sidewalk shall give the appearance that the sidewalk is continuous. That portion of the driveway approach that doubles as a sidewalk shall have a one-fourth (1/4) inch per foot cross slope the same as the abutting sidewalk.
3. A two (2) inch expansion joint is required between the street and driveway approach. One (1) additional two (2) inch expansion joint is required between the garage floor and the termination of the driveway.

CITY OF O'FALLON
ENGINEERING DEPARTMENT
O'FALLON, MISSOURI

Integral Curb Detail
"B" at Driveway
SECTION NO. 505.080

TYPE A (MODIFIED) CONSTRUCTION JOINT

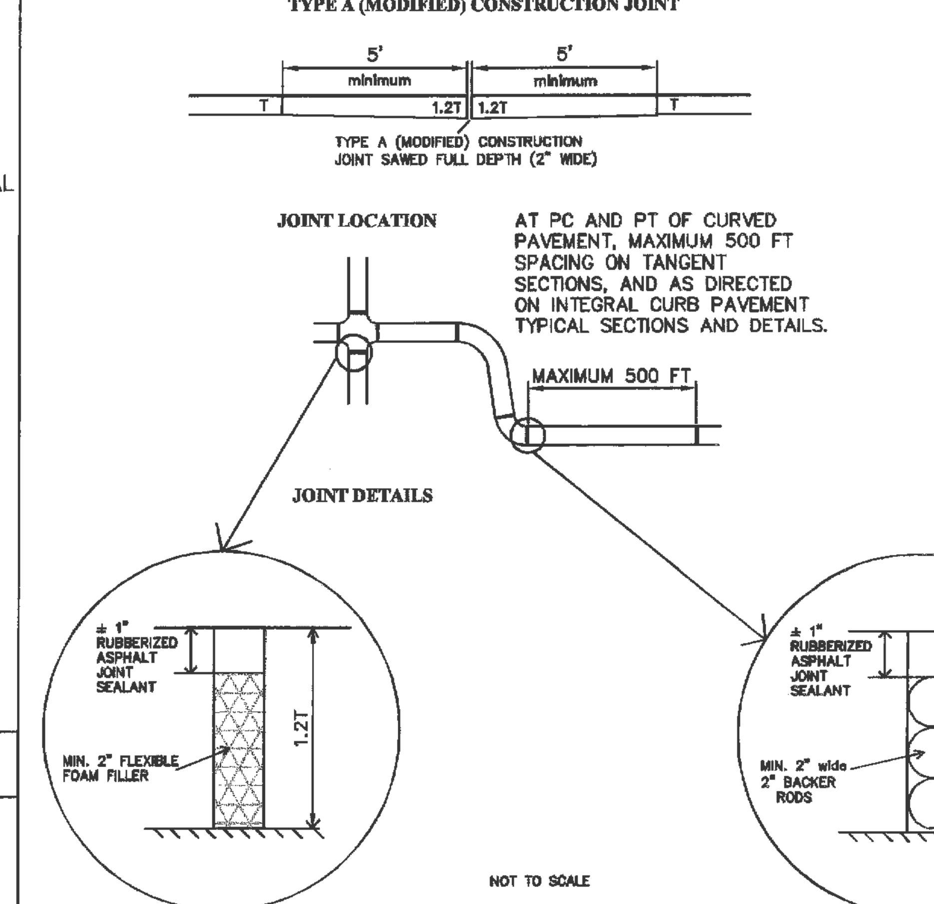

NOTES:
1. THE NUMBER OF BACKER RODS REQUIRED WILL VARY WITH THE PAVEMENT THICKNESS. BACKER RODS AND FLEXIBLE FOAM FILLER MUST EXTEND THROUGH THE FULL DEPTH OF THE PAVEMENT.
2. JOINT FILLER SHALL BE A FLEXIBLE, NONABSORBENT, NON-GASSING, NON-STAINING, NON-SHRINKING MATERIAL, EXTRUDED FROM A CLOSED-CELL POLYMER, ASTM D-5249.
3. JOINT FILLER COMPOSED OF CELLULAR FIBERS, ASTM D-1751, MAY BE USED AT DRIVEWAY, SIDEWALK, AND SEWER INLET AND MANHOLE LOCATIONS.
4. SEE "INTEGRAL CURB DETAIL "B" AT DRIVEWAYS" FOR EXPANSION JOINT REQUIREMENTS AT DRIVEWAY CONNECTIONS TO THE STREET AND THE GARAGE.

CITY OF O'FALLON
ENGINEERING DEPARTMENT
O'FALLON, MISSOURI

PAVEMENT CONSTRUCTION
DETAIL

*ALL NON-REINFORCED CONCRETE SHALL BE 4,000 P.S.I. AT 28 DAYS

I:\120170 – THOELE HWY K RETAIL\Dwg\120170-IMP PLANS-ROADWAY.dwg 7/22/2014 8:32 AM

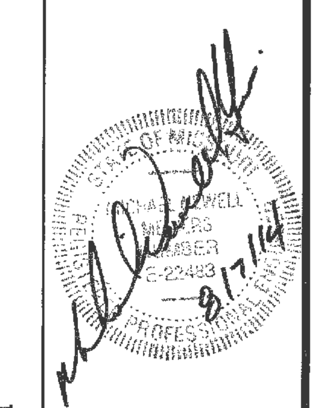

HIGHWAY "K" RETAIL
– ACCESS DRIVE

S|C
E|S
ST. CHARLES ENGINEERING & SURVEYING, INC.
801 S. FIFTH STREET, SUITE 202
ST. CHARLES, MO 63301
TEL: (636) 947-0607
FAX: (636) 947-2448

ENGINEER SIGNATURE
BLOCK

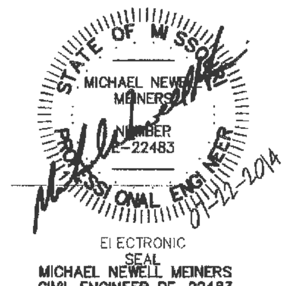

ELECTRONIC
SEAL
MICHAEL NEWELL MEINERS
CIVIL ENGINEER PE-22483

Developer / Owner Information
K PROPERTIES HOLDINGS, LLC
1704 NORTH FOURTH STREET
ST. CHARLES, MO 63301
CONTACT: MIKE THOELE
(314) 220-1205

CITY OF O'FALLON PAVEMENT DETAILS

P+Z No. 18-12.05
Approval Date: May 2, 2013
City No.