Initial upper-case letters at least 6 inches in height and lower-case letters at least 4.5 inches in height for all street names.

Colors: Legend - Black (non-retroreflective)
$\frac{1}{4}$" Border - Black (non-retroreflective)
Background - White (retroreflective)
Logo - as shown (non-retroreflective)

SIX (6) INCH SERIES C BLACK LETTERING FOR STREET NAME AND FOUR (4) INCH SERIES B LETTERS FOR THE SUFFIX ON WHITE REFLECTIVE BACKGROUND AND SHALL CONTAIN A SIX (6) INCH HIGH DARDENNE PRAIRIE LOGO TO THE LEFT OF THE STREET NAME. A SIGN PROOF CAN BE APPROVED BY THE CITY ENGINEER PRIOR TO THE MANUFACTURE OR INSTALLATION.

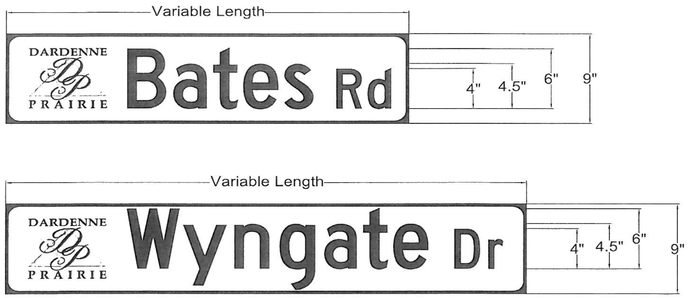

MUTCD D3-1a

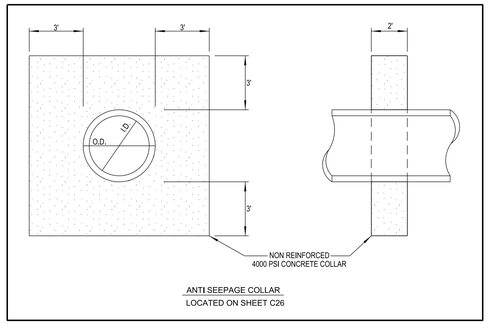

ANTI SEEPAGE COLLAR
LOCATED ON SHEET C26

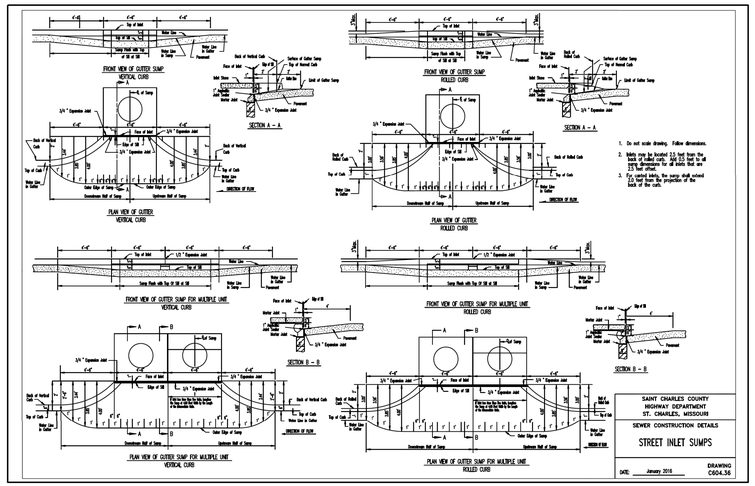

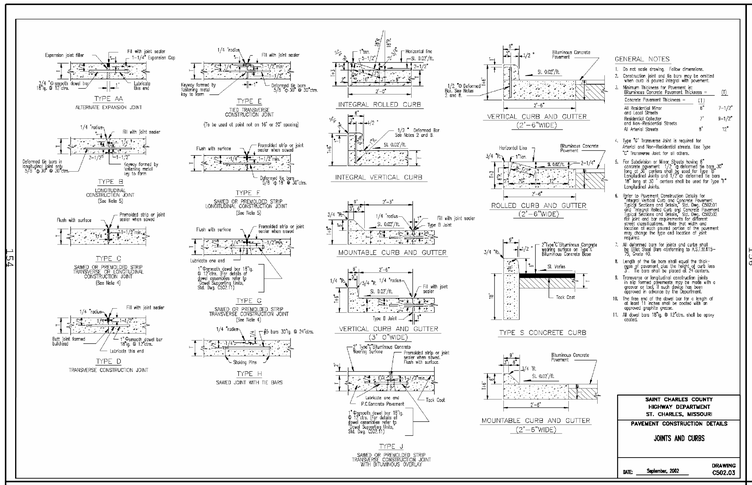

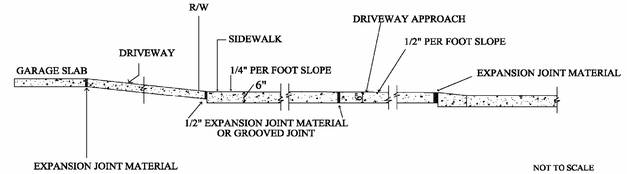

NOTES:
1. A 1" JOINT IS REQUIRED AT THE CURB AND GARAGE FOR ALL DRIVEWAYS LOCATED ON THE OUTER EDGE OF CURVED PAVEMENT, UNLESS GROOVED JOINTS ARE USED AT SIDEWALK. THEN A 2" JOINT IS REQUIRED AT CURB.
2. A 1/2" JOINT IS REQUIRED AT THE CURB AND GARAGE FOR ALL DRIVEWAYS LOCATED ON TANGENT SECTIONS OF PAVEMENT OR ON THE INNER EDGE OF CURVED PAVEMENT.
3. EXPANSION JOINT MATERIAL MUST EXTEND THROUGH THE FULL DEPTH OF THE PAVEMENT.
4. SIDEWALK THICKNESS SHALL BE A MINIMUM OF 7" THROUGH COMMERCIAL DRIVEWAYS.

SAINT CHARLES COUNTY
HIGHWAY DEPARTMENT
ST. CHARLES, MISSOURI
PAVEMENT CONSTRUCTION DETAILS
Integral Curb Detail "B" at Driveways
DATE: May, 2002
DRAWING C502.05

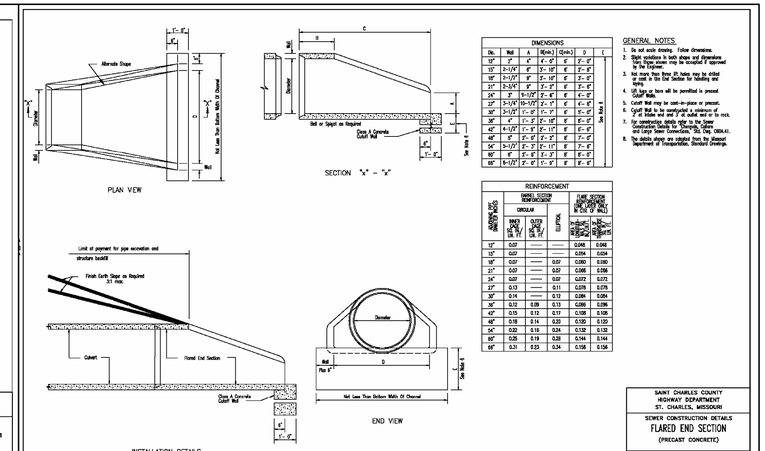

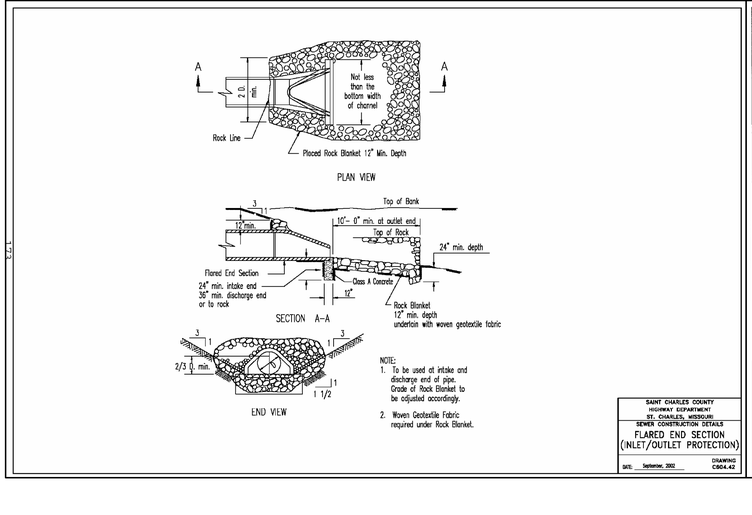

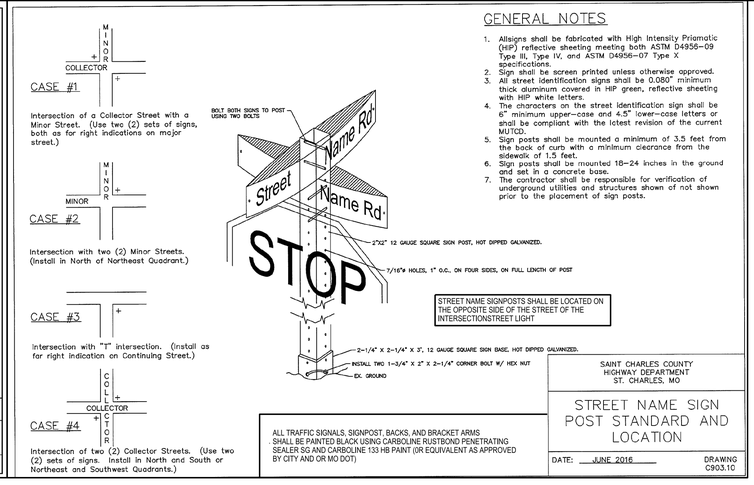

STREET NAME SIGNPOSTS SHALL BE LOCATED ON THE OPPOSITE SIDE OF THE STREET OF THE INTERSECTIONSTREET LIGHT

GENERAL NOTES

1. All signs shall be fabricated with High Intensity Priamatic (HIP) reflective sheeting meeting both ASTM D4956-09 Type III, Type IV, and ASTM D4956-07 Type X specifications.
2. Sign shall be screen printed unless otherwise approved.
3. All street identification signs shall be 0.080" minimum thick aluminum covered in HIP green, reflective sheeting with HIP white letters.
4. The characters on the street identification sign shall be 6" minimum upper-case and 4.5" lower-case letters or shall be compliant with the latest revision of the current MUTCD.
5. Sign posts shall be mounted a minimum of 3.5 feet from the back of curb with a minimum clearance from the sidewalk of 1.5 feet.
6. Sign posts shall be mounted 18-24 inches in the ground and set in a concrete base.
7. The contractor shall be responsible for verification of underground utilities and structures shown of not shown prior to the placement of sign posts.

ALL TRAFFIC SIGNALS, SIGNPOST, BACKS, AND BRACKET ARMS SHALL BE PAINTED BLACK USING CARBOLINE RUSTBOND PENETRATING SEALER SG AND CARBOLINE 133 HB PAINT (OR EQUIVALENT AS APPROVED BY CITY AND OR MO DOT)

SAINT CHARLES COUNTY
HIGHWAY DEPARTMENT
ST. CHARLES, MO

STREET NAME SIGN POST STANDARD AND LOCATION

DATE: JUNE 2016
DRAWING C903.10

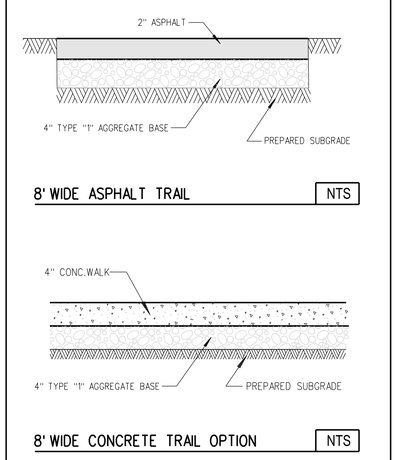

8' WIDE TRAIL TO BE PRIVATE AND MAINTAINED BY THE INVERNESS HOMEOWNERS ASSOCIATION

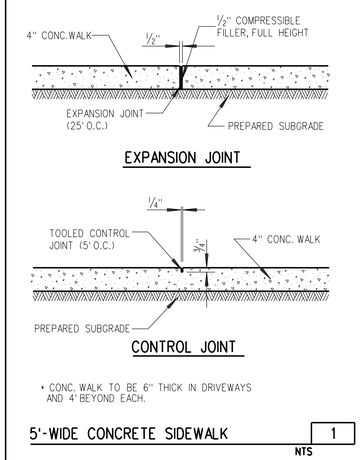

* CONC. WALK TO BE 6" THICK IN DRIVEWAYS AND 4' BEYOND EACH.

5'-WIDE CONCRETE SIDEWALK | 1
NTS

McKELVEY HOMES
Building a Tradition of Excellence Since 1986
218 CHESTERFIELD TOWNE CENTRE
CHESTERFIELD, MISSOURI 63005
(636) 530-6900

VOLZ Incorporated
ENGINEERS
LAND PLANNING
LAND SURVEYING
TRANSPORTATION
CONST. MANAGEMENT
1646 Indian Wood Circle, Suite 210
Maryland Heights, Mo. 63043
314.426.6212 Main
314.890.1250 Fax
www.volzinc.com
Water Quality Authority #203

STATE OF MISSOURI
03/07/2022
TIMOTHY JOHN MEYER
NUMBER E-24665

TIMOTHY J MEYER
Professional Engineer
MO E-24665

INVERNESS

CONSTRUCTION DETAILS

PHASE 3

1575 BRYAN RD.

Project # 22450

01/20/2022

C39

H:\CAD\22450-22499\22450\mxp\Plans\22450 - C39 Construction Details.dgn Master Master 3/7/2022 2:49:36 PM Plotted by jestevens Plot Scale: 50.000000 / in. Plot Driver: Volz15.PDF.pltcfg Pen Table: Volz15.PDF.tbl