H:\CAD\22400-22499\22450\ImpPlans\22450 - C40 Construction Details.dgn : Master Model 3/7/2022 2:48:51 PM Plotted by: jeatkins Plot Scale: 50.000100 ' / in. Plot Driver: Volz15 PDF.pltcfg Pen Table: Volz15 PDF.tbl

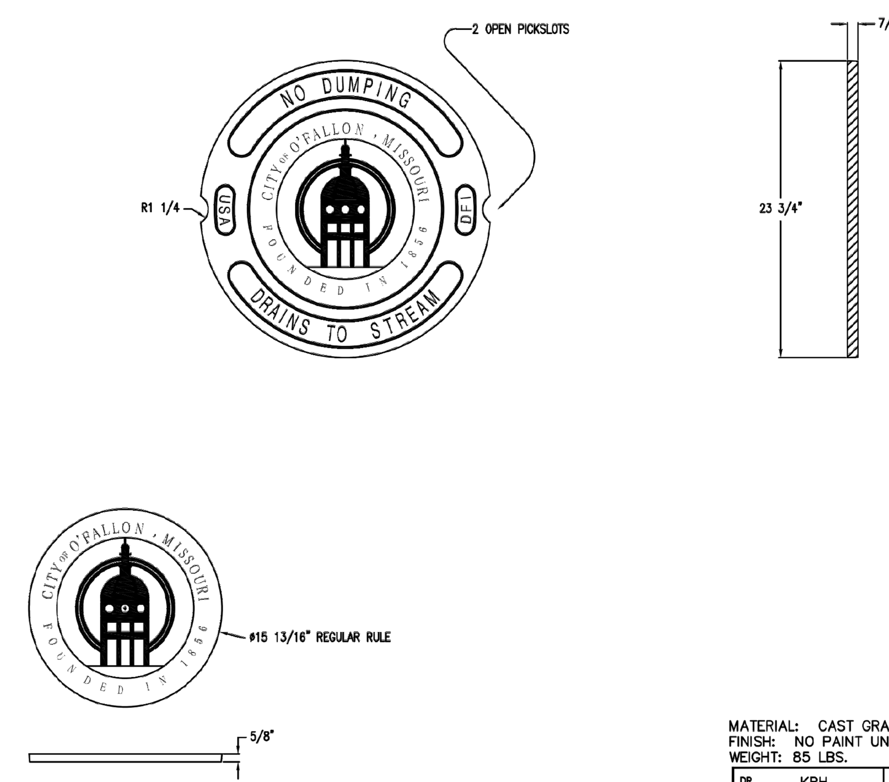

MATERIAL: CAST GRAY IRON ASTM A-48, CLASS 35B
FINISH: NO PAINT UNLESS SPECIFIED ON PURCHASE ORDER
WEIGHT: 85 LBS.

DR. KRH	SCALE 1/8"=1"	TITLE: 4580 COVER
CH.		
APP.	NEENAH FOUNDRY NEENAH WISCONSIN 54956 PHONE 800-558-5075 LINCOLN, NEBRASKA 68529 PHONE 800-234-7466	NF-4580-2727 B
DATE 11/21/2013		
www.neenahfoundry.com		

CAD DWG. REF: 4580-2727.DWG- 1

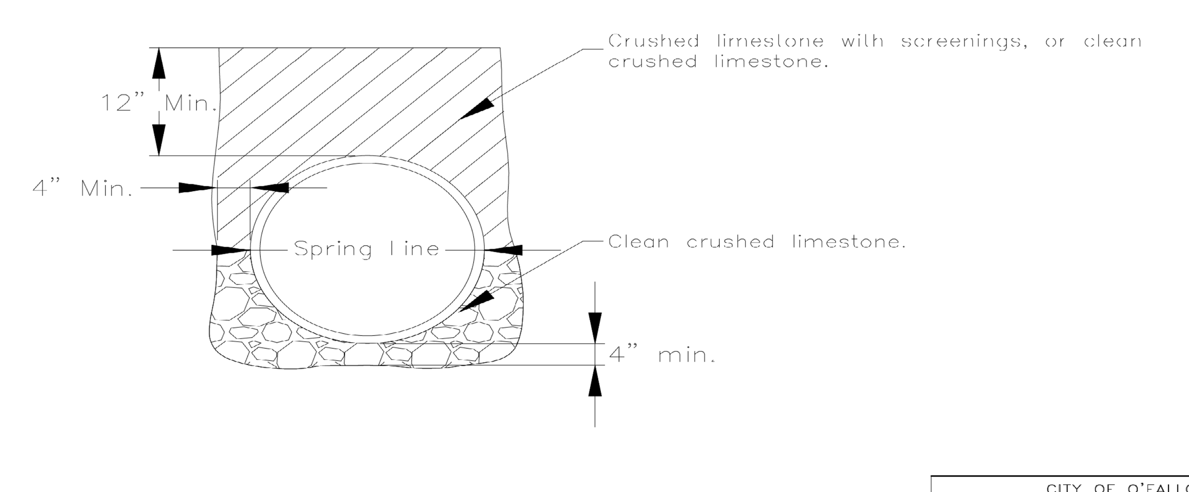

CITY OF O'FALLON
ENGINEERING DEPARTMENT
O'FALLON, MISSOURI

SANITARY SEWER TRENCH DETAIL

+ From Front of Curb Line
++ For Truncated Dome Mat Detail, See Std. Dwg. Sheet 13

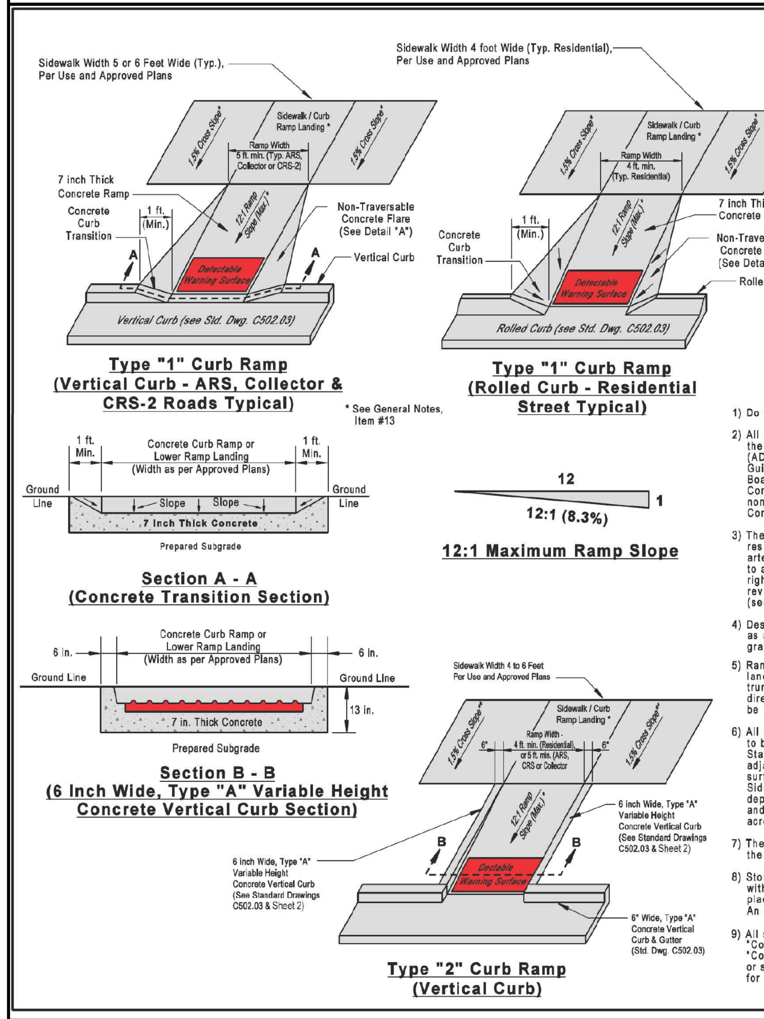

Type "1" Curb Ramp (Vertical Curb - ARS, Collector & CRS-2 Roads Typical)

Type "1" Curb Ramp (Rolled Curb - Residential Street Typical)

* See General Notes, Item #13

12:1 (8.3%)

12:1 Maximum Ramp Slope

Section A - A (Concrete Transition Section)

Section B - B (6 Inch Wide, Type "A" Variable Height Concrete Vertical Curb Section)

Type "2" Curb Ramp (Vertical Curb)

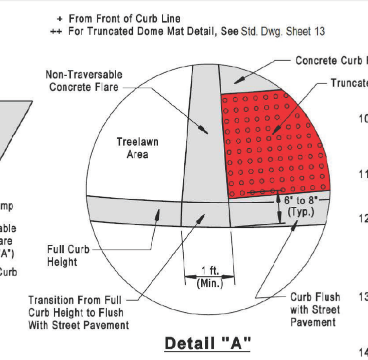

Detail "A"

General Notes

1) Do not scale drawing, follow dimensions.

2) All areas of the pedestrian access route must be compliant with the "Americans with Disabilities Act Accessibility Guidelines (ADAAG)". Exceptions must be approved by the Engineer. Guidelines may be viewed online on the United States Access Board's Internet website at www.access-board.gov. It is the Contractor's responsibility to meet these guidelines. Areas of non-compliance shall be removed and corrected at the Contractor's expense.

3) The width for sidewalks shall be a minimum of 4 feet wide for residential streets and a minimum of 5 feet wide for collector or arterial roadways. The minimum width for sidewalks located adjacent to a vertical or rolled curb shall be 6 feet wide (narrow width right-of-way). Required sidewalk width will be determined during plan review and approval, and will be based on site conditions and usage. (see Standard Drawing Sheet 12, "Concrete Sidewalk Details")

4) Designed ramp length may be adjusted in the field by the Contractor, as approved by the Engineer based on actual measurements of street grade, using the curb ramp length tables on drawing Sheet 2.

5) Ramp running slope shall be a maximum of 12:1 or 8.3%. Curb ramp landings shall have a minimum size of 4 ft. by 4 ft. (not including the truncated dome mat), with a cross slope of 1.5% (+ or - 0.5%) in any direction (Slope: 1.0% Min. to 2.0% Max.). Sidewalk cross slope shall be 1.5% (+ or - 0.5%) (Slope: 1.0% Min. to 2.0% Max.).

6) All sidewalk sections shall be 4 inches thick, except where required to be thicker such as driveway crossings, etc., as shown on other Standard Drawings or approved plans. All curb ramps, lower landings adjacent to the curb and concrete slabs containing detectable warning surface (truncated dome mat), shall be a minimum of 7 inches thick. Sidewalk joints shall be troweled or sawn with a minimum 1/2 inch depth joint. Finished sidewalk shall be a stable, slip resistant surface, and does not pond water. Pedestrian access route shall continue across driveways.

7) The running grade of a sidewalk shall not exceed 5.0% unless it is matching the grade of the adjacent roadway.

8) Storm water inlets, signs, posts, manhole covers, pull boxes and other access lids should be avoided within the sidewalk. If such a location is necessary, the feature must meet ADA standards. Mailbox placement should also be avoided in the sidewalk. Utility poles will not be allowed in the sidewalk. An accessible route must have minimum 3 foot (36 inch) clear width (ADAAG).

9) All sidewalk sections, bus stop pads, and landings at the top of curb ramps, shall be paid for as "Concrete Sidewalk". Curb ramps and landings at the bottom of curb ramps, shall be paid for as "Concrete Curb Ramp". No direct payment will be made for variable height curb, concrete flares, or saw cut when constructed as part of a landing or curb ramp. No direct payment will be made for pre-molded expansion joint filler with joint sealer.

General Notes (Cont.)

10) Where a curb ramp meets the pavement, a bullnose will not be permitted. Transition from the sidewalk to the gutter to the roadway surface must be flush. If a monolithic concrete curb is constructed, strike a dummy joint across the bottom of the ramp at the curb line.

11) Side flares of curb ramps, in the path of pedestrian travel (traversable), shall not exceed a slope of 10H:1V. Side flares outside the pedestrian path (non-traversable) may be 2H:1V slope or vertical.

12) For sidewalk locations on cul-de-sacs, refer to Pavement Construction Details (Std. Dwgs. C502.06 through C502.10). For pavement longitudinal and transverse joints and tie bar requirements and dimensions, refer to the Pavement Construction Details for "Joints and Curbs" (Std. Dwg. C502.03). For roadway cross slopes, pavement types, and thickness, refer to the necessary Standard Typical Section.

13) Landings shall be constructed at the top and/or bottom of a curb ramp wherever a turning movement or access to pedestrian push button is required. Landings located in the roadway must be completely contained within the crosswalk.

14) Detectable Warning Surface (DWS) shall consist of a surface of truncated domes aligned in a square or radial grid pattern. The pattern shall be aligned with the edge of pavement in the direction of travel. The DWS shall extend 24 inches in the direction of travel and span the full width of the curb ramp (exclusive of flares), landing or blended transition. The DWS shall contrast visually with the ramp, landing, raised island and cut-through island surfaces, and shall be dark-on-light (or light-on-dark with the approval of the engineer) (see Std. Dwg. Sheet 13). Truncated domes shall be aligned parallel to the running slope of a ramp, in a square grid, when installed in the direction of pedestrian travel, to permit wheels to roll between the domes. When installed on a landing or blend transition, DWS shall be aligned perpendicular or radial to the break between the ramp, landing or blended transition and the street. DWS shall be installed 6 in. to 8 in. from the face of curb (see Detail "A" on this drawing). DWS in concrete cut-through island, shall be aligned with the face of the curb of the cut-through island (see Std. Dwg. Sheet 10). The Detectable Warning Surface (DWS) or Truncated Dome Mats, shall be consistent throughout the project and are required to be installed on all curb ramps at public and private street intersections; signalized entrances; and at channelized or raised islands where a curb ramp or cut-through is provided. DWS may be omitted on curb ramps adjacent to non-signalized private or commercial entrances. No direct payment will be made for detectable warning surfaces.

15) The DWS type shall be "Cast-in-Place with Screw Anchoring" (both new and retrofit application) or "Surface Applied with Adhesive" (retrofit only), with the approved manufacturers listed on the "MoDOT Qualified Lists, Qualified Truncated Domes, FS-1067 Table 1" (also see Std. Dwg. Sheet 13, General Note 4). The "MoDOT Qualified Lists" are located on Internet at: www.modot.org/business/materials/pdf/main/tables.pdf

16) Detectable Warnings (truncated domes) shall be installed per manufacturer's recommendations and instructions (see Std. Dwg. Sheet 13). Truncated Domes shall span the full width of the ramp, landing or cut-through island. Stamped concrete truncated domes or grooves will not be accepted.

ST. CHARLES COUNTY HIGHWAY DEPARTMENT
201 N. Second St. - Suite 429
St. Charles, MO 63301

CONCRETE SIDEWALK AND CURB RAMP DETAILS

DATE EFFECTIVE:		SHEET NO.
01/01/2012	608.10A	1 OF 13

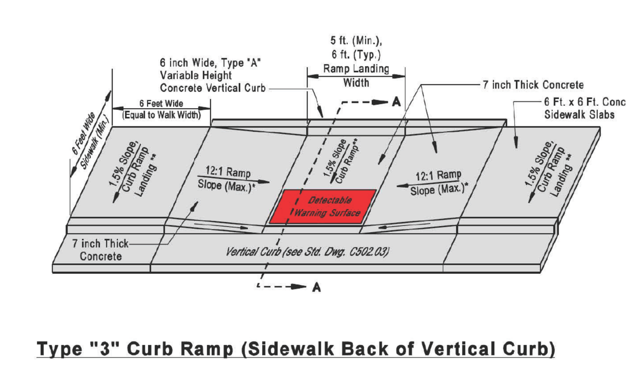

Type "3" Curb Ramp (Sidewalk Back of Vertical Curb)

* See General Notes (Std. Dwg. Sheet 1)

** Cross Slope 1.5% (+ or - 0.5%)

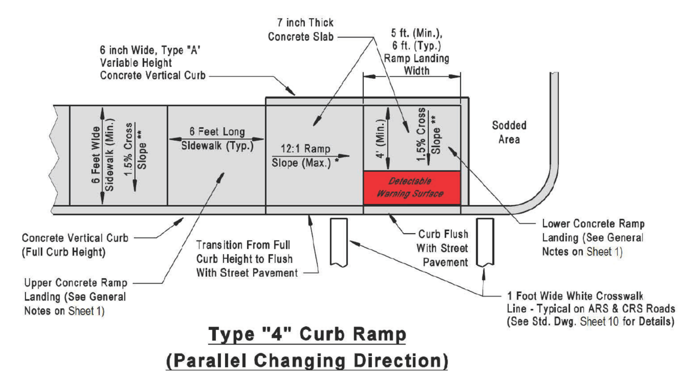

Type "4" Curb Ramp (Parallel Changing Direction)

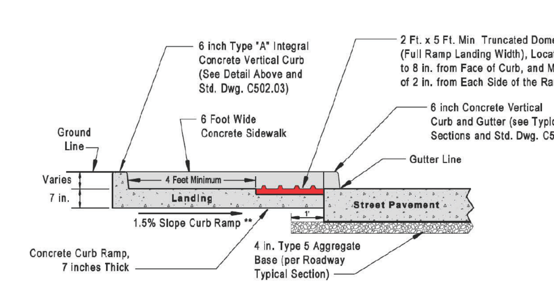

Section A - A

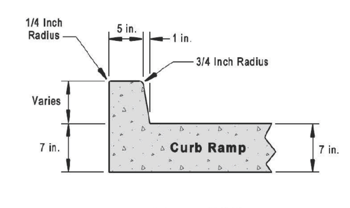

Type "A" Concrete Vertical Curb (Monolithic)

Curb Ramp (Type 3 & 4) Length Tables ##

Curb Height \ Negative Street Grade	0%	- 1%	- 2%	- 3%	- 4%	- 5%	- 6%	- 7%	- 8%
3 in.	3ft-0in	2ft-8in	2ft-5in	2ft-2in	2ft-0in	1ft-11in	1ft-9in	1ft-8in	1ft-6in
4 in.	4ft-0in	3ft-7in	3ft-3in	2ft-11in	2ft-8in	2ft-6in	2ft-4in	2ft-2in	2ft-0in
5 in.	5ft-0in	4ft-6in	4ft-1in	3ft-8in	3ft-5in	3ft-2in	2ft-11in	3ft-0in	3ft-0in
6 in.	6ft-0in	5ft-4in	4ft-10in	4ft-5in	4ft-1in	3ft-9in	3ft-6in	3ft-0in	3ft-0in
7 in.	7ft-0in	6ft-3in	5ft-8in	5ft-2in	4ft-9in	4ft-5in	4ft-1in	4ft-0in	4ft-0in
8 in.	8ft-0in	7ft-2in	6ft-5in	5ft-11in	5ft-5in	5ft-0in	4ft-8in	4ft-0in	4ft-0in

Curb Height \ Positive Street Grade	0%	+ 1%	+ 2%	+ 3%	+ 4%	+ 5%	+ 6%	+ 7%	+ 8%
3 in.	3ft-0in	3ft-5in	3ft-11in	4ft-8in	5ft-9in	7ft-6in	10ft-9in	#	#
4 in.	4ft-0in	4ft-7in	5ft-3in	6ft-3in	7ft-8in	10ft-0in	14ft-3in	#	#
5 in.	5ft-0in	5ft-8in	6ft-7in	7ft-10in	9ft-7in	12ft-6in	#	#	#
6 in.	6ft-0in	6ft-10in	7ft-11in	9ft-5in	11ft-6in	15ft-0in	#	#	#
7 in.	7ft-0in	7ft-11in	9ft-3in	10ft-11in	13ft-6in	#	#	#	#
8 in.	8ft-0in	9ft-1in	10ft-6in	12ft-6in	#	#	#	#	#

\# - Indicates Ramp Excess of 15 Feet and May Require Alternate Design as Determined by the Engineer.
\#\# - Includes Type 1 Ramp When Located in 4 inch Raised Monolithic Concrete Island.

General Notes

1) Do not scale drawing, follow dimensions.

2) See Standard Drawing Sheet 1, "Concrete Curb Ramp Details (Types 1 & 2)" for the remainder of the "General Notes" for this drawing as well as ramp construction details.

ST. CHARLES COUNTY HIGHWAY DEPARTMENT
201 N. Second St. - Suite 429
St. Charles, MO 63301

CONCRETE SIDEWALK AND CURB RAMP DETAILS

DATE EFFECTIVE:		SHEET NO.
01/01/2012	608.10A	2 OF 13

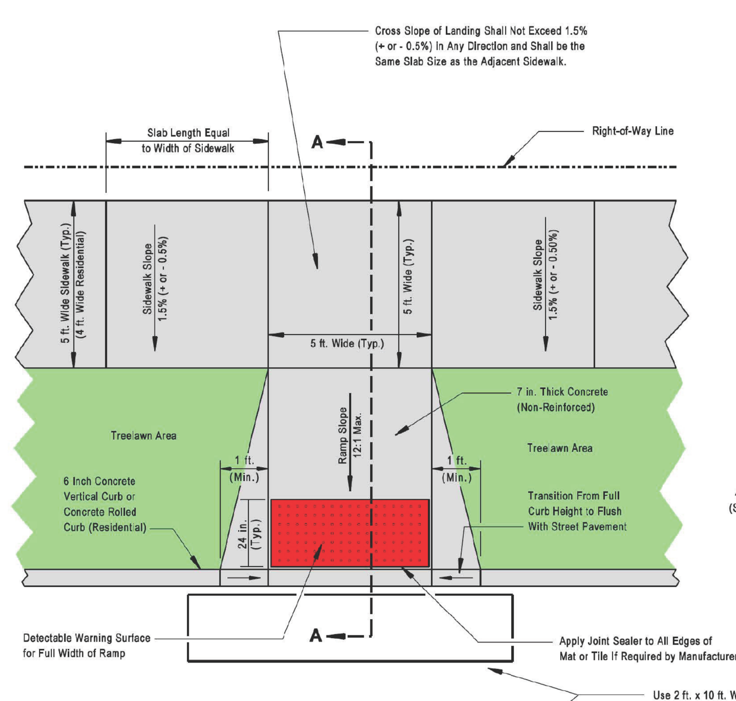

Type "1" Curb Ramp (See Std. Dwg. Sheet 1)
New Construction Detectable Warning Placement
(Mid-Block Curb Ramp Shown)

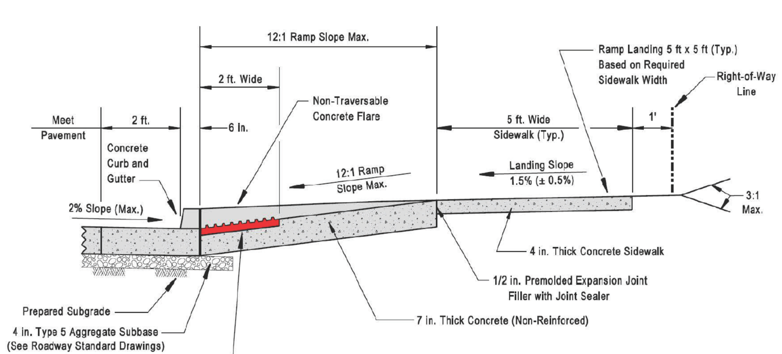

Section "A-A"
(Type "1" Curb Ramp Typical Section)

General Notes

1) Do not scale drawing, follow dimensions.

2) See Standard Drawing Sheet 1, "Concrete Sidewalk and Curb Ramp Details (Types 1 & 2)" for the remainder of the "General Notes" for this drawing as well as ramp construction details.

ST. CHARLES COUNTY HIGHWAY DEPARTMENT
201 N. Second St. - Suite 429
St. Charles, MO 63301

CONCRETE SIDEWALK AND CURB RAMP DETAILS

DATE EFFECTIVE:		SHEET NO.
01/01/2012	608.10A	3 OF 13

LED Post Top Lantern

All Styles	Lamp Rating**	Monthly Rate*
	100 LED	$22.59

Overall height is approximately 16 feet on a tapered pole.

* Less Federal Tax Rate Reduction plus FAC and all applicable sales and municipal taxes

** Lamp Rating for Post Top Lantern LED is high-pressure sodium watts equivalent. LEDs are more efficient and use less energy than the rating shown. For more information please go to **AmerenMissouri.com/Streetlights**.

All post top fixtures require underground wiring (cost of which is not included in the above).

Monthly rate includes fiberglass pole, fixture, lamp electricity and maintenance.

Early American | Colonial | Contemporary** | Aspen**

**Additional initial charge applies

Rates effective August 1, 2018

POLE AND COLONIAL POST TOP LANTERN COLOR BLACK OR APPROVED EQUAL

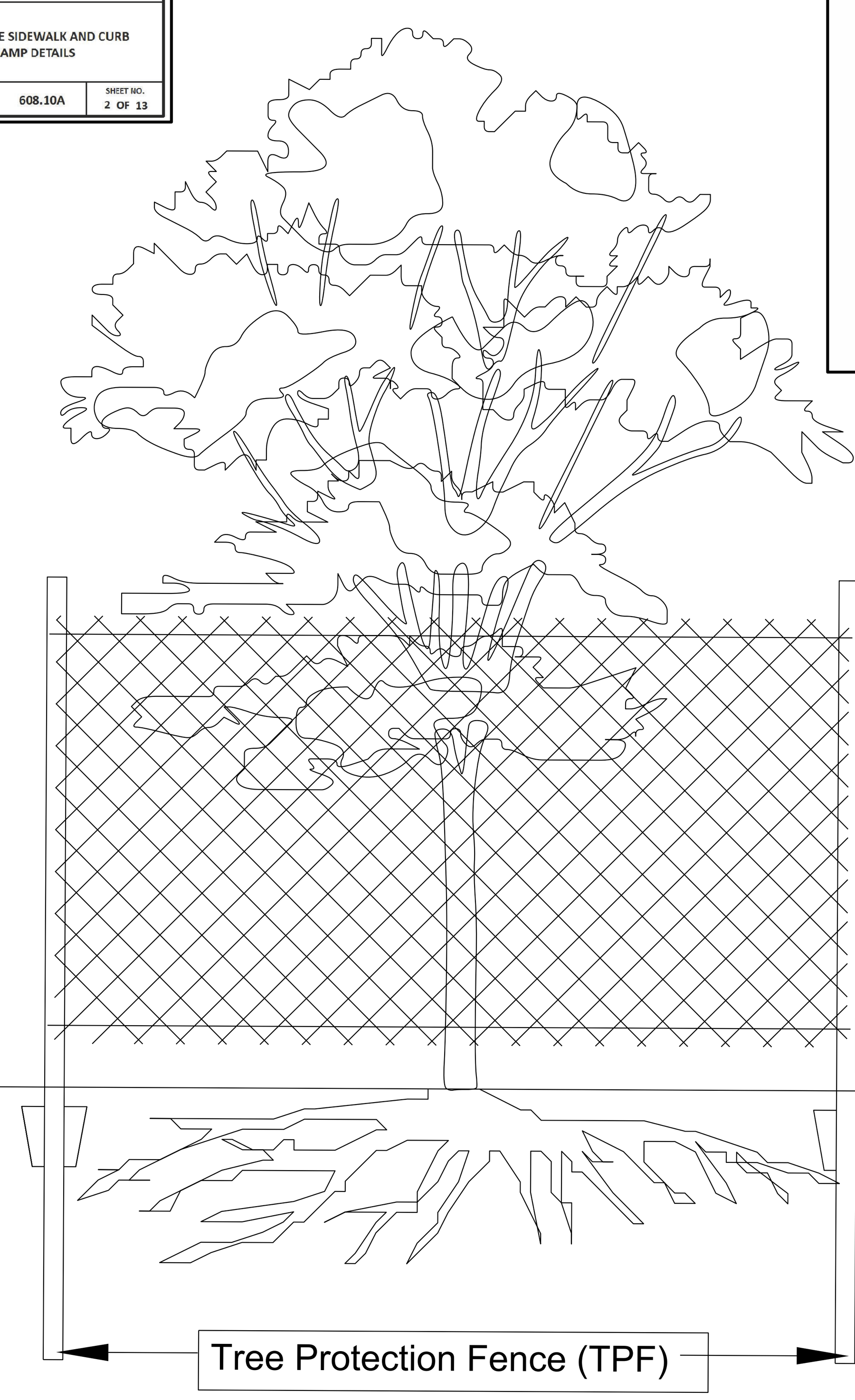

Tree Protection Fence (TPF)

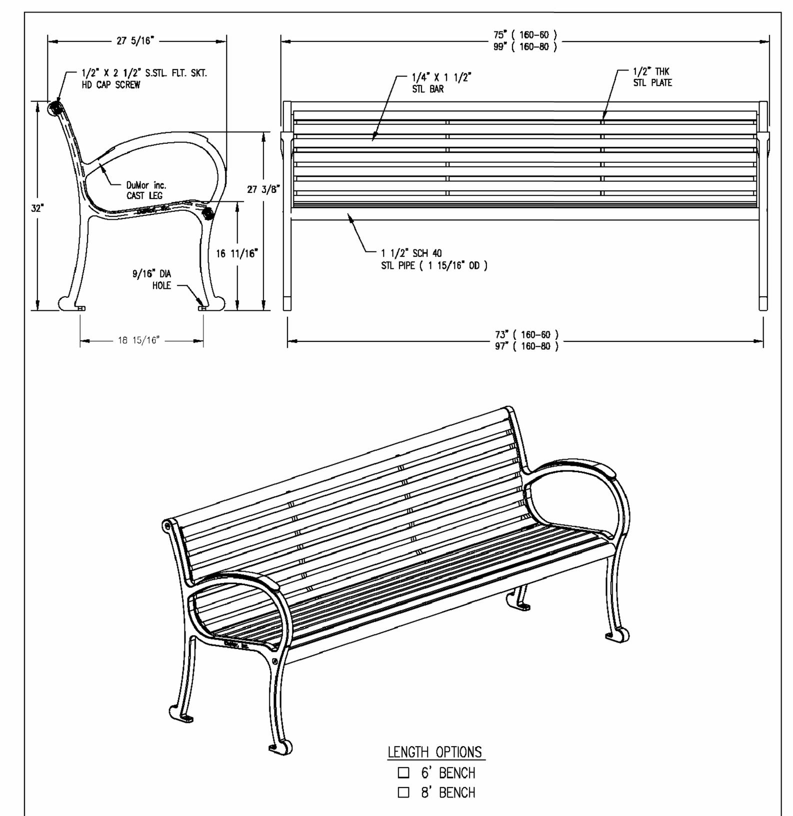

LENGTH OPTIONS
☐ 6' BENCH
☐ 8' BENCH

NOTES
1.) ALL STL. MEMBERS COATED W/ ZINC RICH COATING THEN POLYESTER POWDER COATED.
2.) BENCH IS SHIPPED UNASSEMBLED.
3.) 1/2" X 3 3/4" EXPANSION ANCHOR BOLTS PROVIDED.

DuMor, inc. P.O. Box 142 Mifflintown, PA 17059-0142

SCALE : NONE	TITLE : BENCH		
DATE DRAWN : 7/2/03			
DRAWN BY : JSB	REV. D	DRAWING NUMBER 160 SERIES	SHEET 1 OF 2
DATE REV. : 3/20/07			
REV. BY : AWH			

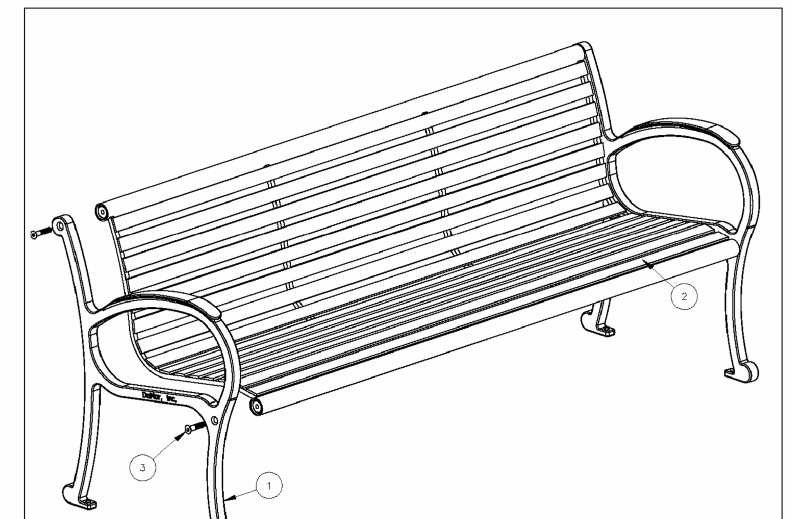

NOTE:
1.) DURING ASSEMBLY PROCEDURE; DO NOT COMPLETELY TIGHTEN HARDWARE.
2.) THE ACTUAL PARTS WILL NOT BE NUMBERED: NUMBERS ONLY APPLY TO DRAWING.

STEP 1:
USE 2 - PCS. CAST IRON BENCH SUPPORT W/ BACK (1)
1 - PC. 6' ALL STL WELDED SEAT SECTION (2)
4 - PCS. 1/2" X 2 1/2" FLT. SKT. HD. CAP SCR. (3)
ATTACH CAST IRON BENCH SUPPORT W/ BACK (1) TO 6' ALL STL WELDED SEAT ASSEMBLY (2) USING HARDWARE (3). TIGHTEN TO SNUG FIT.

STEP 2:
UPON COMPLETION OF BENCH ASSEMBLY SQUARE ALL COMPONENTS THEN TIGHTEN ALL HARDWARE.

STEP 3:
MOUNT AND ANCHOR AS SPECIFIED.

ITEM	QTY	PART NO	DESCRIPTION
1	2	0-160-00-01	CAST IRON BENCH SUPPORT FOR BACKREST
2	1	0-160-60-02	6' STL SEAT
3	4	1-12-065	1/2" X 2 1/2" FLT SKT HD CAP SCR

DuMor, inc. P.O. Box 142 Mifflintown, PA 17059-0142

SCALE : NONE	TITLE : BENCH ASSEMBLY		
DATE DRAWN : 7/2/03			
DRAWN BY : JSB	REV. D	DRAWING NUMBER 160 SERIES	SHEET 2 OF 2
DATE REV. : 3/20/07			
REV. BY : AWH			

McKELVEY HOMES
Building A Tradition Of Excellence Since 1898
218 CHESTERFIELD TOWNE CENTRE
CHESTERFIELD, MISSOURI 63005
(636) 530-6900

VOLZ Incorporated
ENGINEERS
LAND PLANNING
LAND SURVEYING
TRANSPORTATION
CONST. MANAGEMENT
10849 Indian Head Ind'l. Blvd.
St. Louis, Missouri 63132
314.426.6212 Main
314.890.1250 Fax
www.volzinc.com
Authority #203

STATE OF MISSOURI
03/07/2022
TIMOTHY JOHN MEYER
NUMBER E-24665
REGISTERED PROFESSIONAL ENGINEER
TIMOTHY J MEYER
Professional Engineer
MO E-24665

INVERNESS

CONSTRUCTION DETAILS

PHASE 3

1575 BRYAN RD.

Project # 22450

01/20/2022

C40