A DETAIL SHEET FOR
JEFFERSON BANK AND TRUST

98-9713EA 09-09-03

REVISIONS
11/10/03 DUCKETT CREEK
11/11/03 CITY COMMENTS
12/09/03 DUCKETT CREEK & CITY

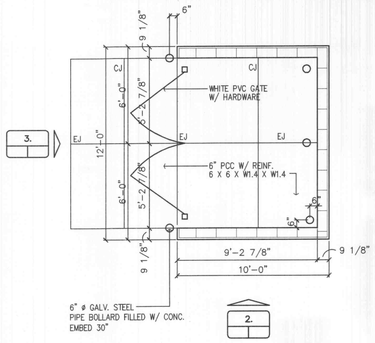

1. TRASH ENCLOSURE PLAN
NOT TO SCALE

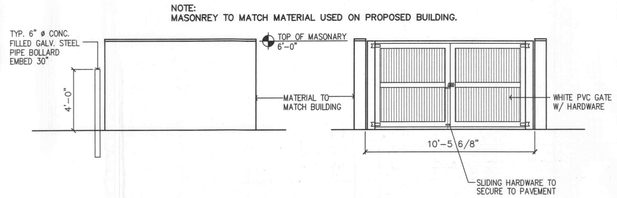

2. ELEVATION
NOT TO SCALE

3. ELEVATION
NOT TO SCALE

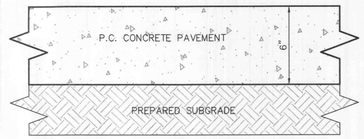

TRASH PAVEMENT DETAIL
NOT TO SCALE

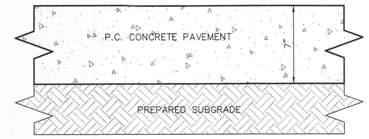

APPROACH PAVEMENT DETAIL
NOT TO SCALE

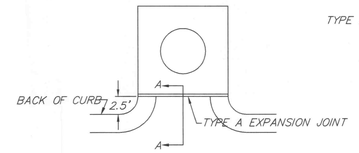

INLET JOINT
N.T.S.

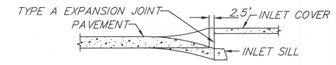

SECTION A-A
N.T.S.

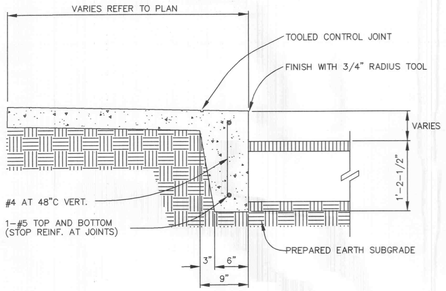

PROVIDE 1/2" PREMOLDED EXPANSION JOINT FILLER AT 60' CENTERS
PROVIDE TOOLED CONTRACTION JOINTS AT 10' C.C.

TURNED DOWN CONCRETE WALK
NOT TO SCALE

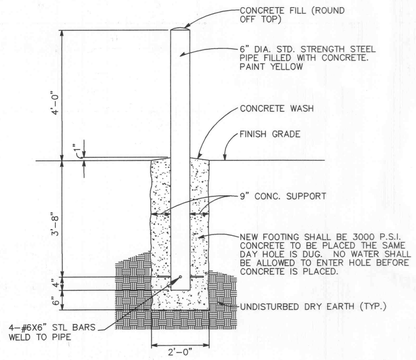

PIPE BOLLARD DETAIL
NOT TO SCALE

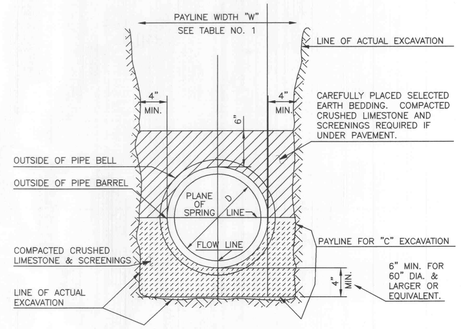

PIPE BEDDING CLASS "C"
(MODIFIED FOR REINFORCED CONCRETE PIPE)

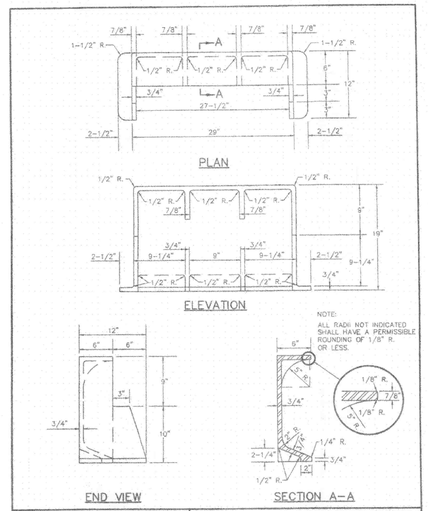

CAST IRON SIDE INTAKE UNIT FOR GRATED INLETS 249 LBS.	METROPOLITAN ST. LOUIS SEWER DISTRICT Standard Details of Sewer Construction		
	Dr. RGW/SAM Ch. J.C.K.	2000	SHEET 51

RESERVED PARKING
12" X 18" SIGN
$50-$300 FINE
12" X 6" SIGN
VAN ACCESSIBLE
12" X 6" SIGN

VAN ACCESSIBLE HANDICAP PARKING SIGN

STANDARD SIGN FACE, STANDARD HIGHWAY DEPARTMENT, OR CITY STREET DEPARTMENT GAUGE, LETTERS AND BORDERS ARE GREEN, THE HANDICAP LOGO SQUARE IS BLUE AND THE BACKGROUND IS WHITE, GALVANIZED U CHANNEL POST 8'-0" LONG, SET 3'-0" INTO GRADE, SET BOTTOM OF SIGN 5'-0" ABOVE FINISHED GRADE.

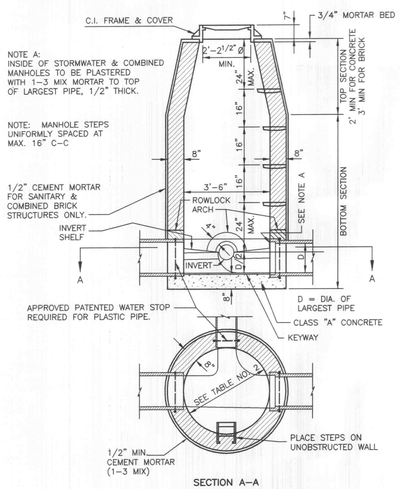

SECTION A-A

LINE MANHOLE
PIPE SEWERS 8"-24" DIA.

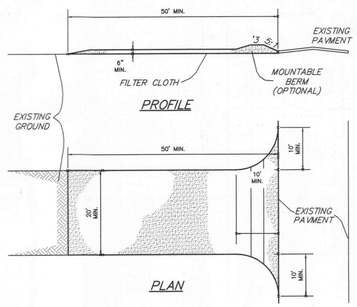

CONSTRUCTION SPECIFICATIONS

1. Stone Size – Use 2" stone, or reclaimed or recycled concrete equivalent.
2. Length – As required, but not less than 50 feet (except on a single residence lot where a 30 foot minimum length would apply).
3. Thickness – Not less than six (6) inches.
4. Width – Twenty (20) foot minimum, but not less than the full width at points where ingress or egress occurs.
5. Filter Cloth – Will be placed over the entire area prior to placing of stone. Filter will not be required on a single family residence lot.
6. Surface Water – All surface water flowing or diverted toward construction entrances shall be piped across the entrance. If piping is impractical, a mountable berm with 5:1 slopes will be permitted.
7. Maintenance – The entrance shall be maintained in a condition which will prevent tracking or flowing of sediment onto public rights-of-way. This may require periodic top dressing with additional stone as conditions demand and repair and/or cleanout of any measures used to trap sediment. All sediment spilled, dropped, washed or tracked onto public rights-of-way must be removed immediately.
8. Washing – Wheels shall be cleaned to remove sediment prior to entrance onto public rights-of-way. When washing is required, it shall be done on an area stabilized with stone and which drains into an approved sediment trapping device.
9. Periodic inspection and needed maintenance shall be provided after each rain.

STABILIZED CONSTRUCTION ENTRANCE/WASHDOWN AREA
NOT TO SCALE

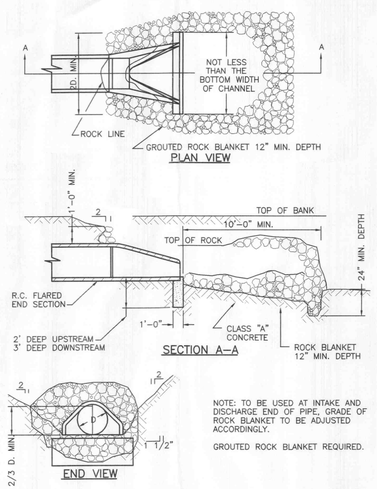

NOTE: TO BE USED AT INTAKE AND DISCHARGE END OF PIPE. GRADE OF ROCK BLANKET TO BE ADJUSTED ACCORDINGLY.

GROUTED ROCK BLANKET REQUIRED.

FLARED END SECTION

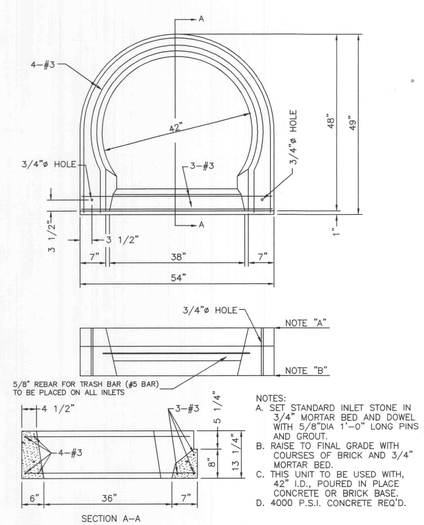

NOTES:
A. SET STANDARD INLET STONE IN 3/4" MORTAR BED AND DOWEL WITH 5/8"DIA 1'-0" LONG PINS AND GROUT.
B. RAISE TO FINAL GRADE WITH COURSES OF BRICK AND 3/4" MORTAR BED.
C. THIS UNIT TO BE USED WITH, 42" I.D., POURED IN PLACE CONCRETE OR BRICK BASE.
D. 4000 P.S.I. CONCRETE REQ'D.

PRECAST CONCRETE UNIT FOR SINGLE CURB INLET

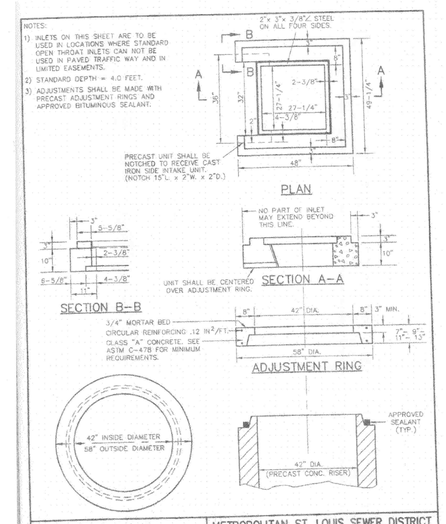

GRATE SEAT FOR 2 GRATE WITH SIDE INTAKE	METROPOLITAN ST. LOUIS SEWER DISTRICT Standard Details of Sewer Construction		
	Dr. S.A.M. Ch. J.C.K.	2000	SHEET 33

SHEET C-107

E:\DWG\9500PLUS\9713E-Waterbury Commercial\9713EA JEFFERSON BANK\CONSTRUCTION\9713EACON.dwg, DETAILS(7), 12/18/2003 11:12:35 AM, Station 23 LW