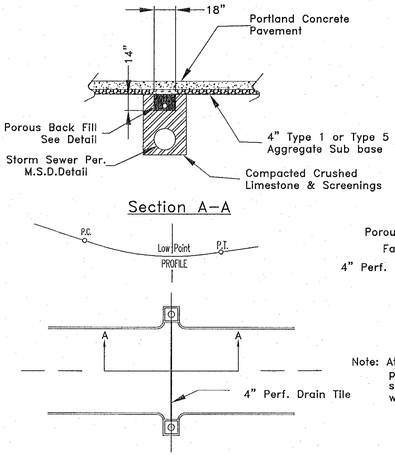

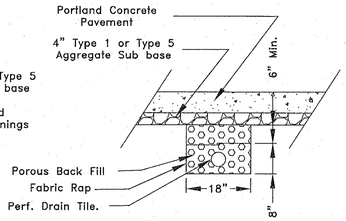

Underdrain Detail

Note: At connections of 4" perforated pipe to sewer structure use an approved water stop gasket.

CITY OF O'FALLON
ENGINEERING DEPARTMENT
O'FALLON, MISSOURI

CLASS A UNDERDRAINS

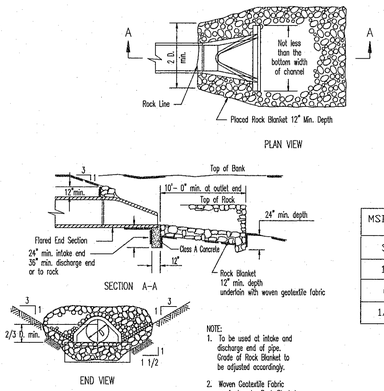

* The discharge point of all flared end sections hall be protected by rip rap or other approved means.

** Rip rap shown at flared end sections will be evaluated in the field by the Engineer, Contractor, and City Inspectors after installation for effectiveness and field modified, if necessary to reduce erosion on and off site.

MSD Type 5 Rock Blanket (% By Weight Passing)			
Sieve	Maximum	Minimum	
12 inch	90	70	
6 inch	30	10	
1/2 inch	5	0	

NOTE:
1. To be used at intake and discharge end of pipe. Grade of Rock Blanket to be adjusted accordingly.
2. Woven Geotextile Fabric required under Rock Blanket.

CITY OF O'FALLON
ENGINEERING DEPARTMENT
O'FALLON, MISSOURI

SEWER CONSTRUCTION DETAILS
FLARED END SECTION (INLET/OUTLET PROTECTION)

* The City of O'Fallon must be provided with a symbol/medallion for review and approval prior to installation. Contact the City if any information is needed.

Size	Style	Adhesive	Message (Part #)
3 7/8" TO 4"	Crystal Cap or Standard Style	Epoxy	No Dumping Drains to Waterway

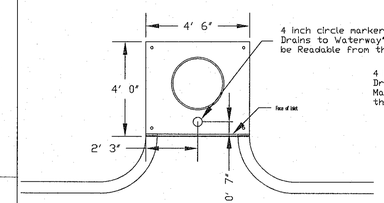

PLAN VIEW OF CURB INLET

4 inch circle marker "No Dumping Drains to Waterway" Marker shall be Readable from the street

4 inch circle marker "No Dumping Drains to Waterway" Marker shall be readable from the side it's placed on.

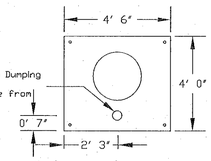

PLAN VIEW OF AREA INLET

CITY OF O'FALLON
ENGINEERING DEPARTMENT
O'FALLON, MISSOURI

STORM DRAIN MARKER LOCATION

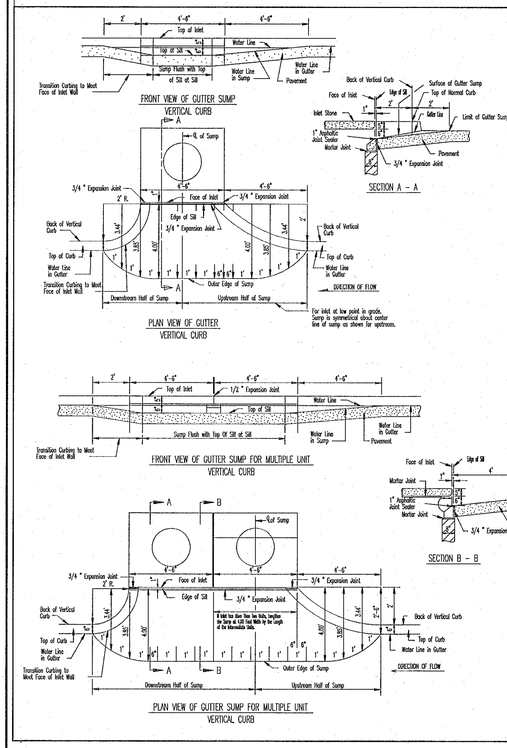

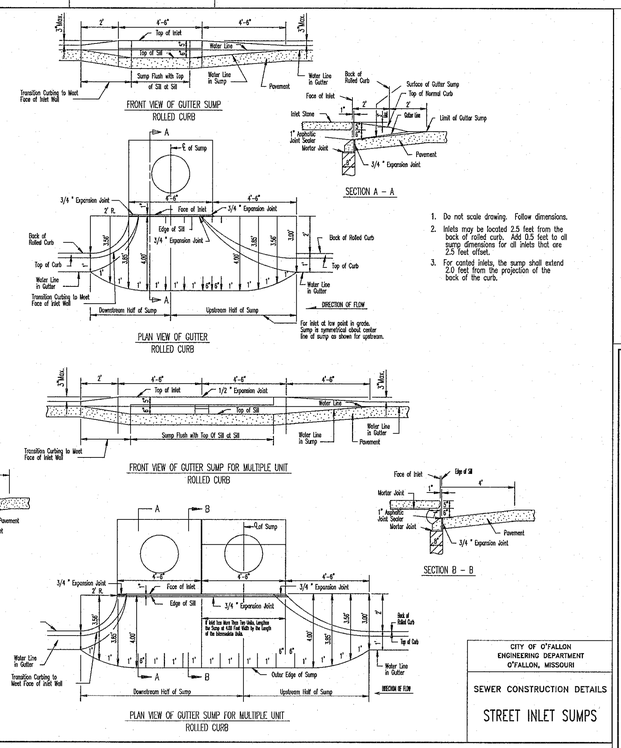

1. Do not scale drawing. Follow dimensions.
2. Inlets may be located 2.5 feet from the back of rolled curb. Add 0.5 feet to all sump dimensions for all inlets that are 2.5 feet offset.
3. For canted inlets, the sump shall extend 2.0 feet from the projection of the back of the curb.

CITY OF O'FALLON
ENGINEERING DEPARTMENT
O'FALLON, MISSOURI

SEWER CONSTRUCTION DETAILS
STREET INLET SUMPS

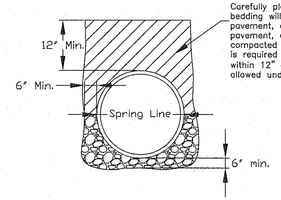

Carefully placed compacted selected earth bedding will be used except if under pavement, or through rock cut areas. If under pavement, or through rock cut areas compacted crushed limestone and screenings is required to the base of pavement or to within 12" of finished surface. Water jetting is allowed under non paved areas.

CITY OF O'FALLON
ENGINEERING DEPARTMENT
O'FALLON, MISSOURI

STORM SEWER TRENCH DETAIL

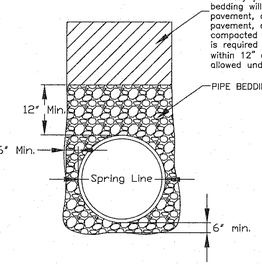

Carefully placed compacted selected earth bedding will be used except if under pavement, or through rock cut areas. If under pavement, or through rock cut areas compacted crushed limestone and screenings is required to the base of pavement or to within 12" of finished surface. Water jetting is allowed under non paved areas.

CITY OF O'FALLON
ENGINEERING DEPARTMENT
O'FALLON, MISSOURI

SANITARY SEWER TRENCH DETAIL

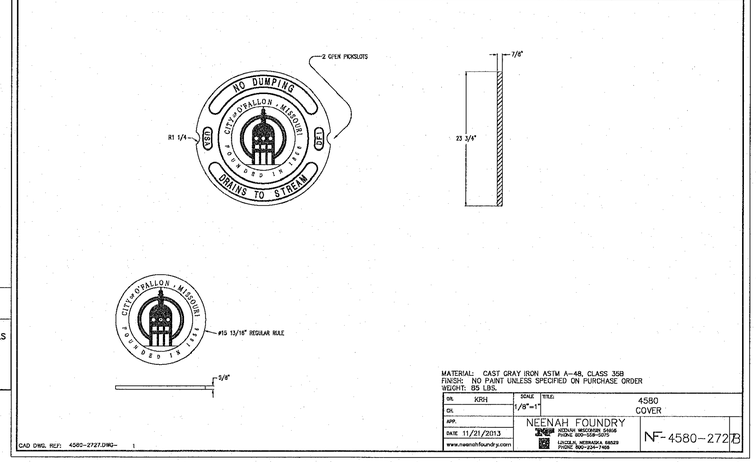

* All other Storm Details will be by M.S.D. 2007 Standards and Specifications.

* A 5/8" Trash bar shall be centered within the opening(s) of all inlets.

ENGINEERS SEAL DOES NOT APPLY TO CITY OF O'FALLON DETAILS ON THIS SHEET.

PROJECT TITLE: KEYSTONE RIDGE

Bax Project #16-16857 | Issue Date: 02/20/2017

ENGINEERING
PLANNING
SURVEYING
221 Point West Blvd.
St. Charles, MO 63301
636-928-5552
FAX 928-1718

DISCLAIMER OF RESPONSIBILITY
I hereby specify that the documents intended to be authenticated by my seal are limited to this sheet, and I hereby disclaim any responsibility for all other Drawings, Specifications, Estimates, Reports or other documents or instruments relating to or intended to be used for any part or parts of the architectural or engineering project or survey.

REVISIONS

05/01/17	CITY COMMENTS
07/20/17	CITY COMMENTS
08/07/17	CITY COMMENTS
08/21/17	CITY COMMENTS
08/31/17	CITY COMMENTS
10/02/17	CITY COMMENTS

Developer / Owner:
KEYSTONE RIDGE LAND, LLC
10328 LAKE BLUFF DRIVE
ST. LOUIS, MO 63123
314-892-3030 EXT. 121

REFERENCE DETAILS

P+Z No. #32-16

City No. #