USPS Approved Specifications – Concrete Pad (Multiple Unit)

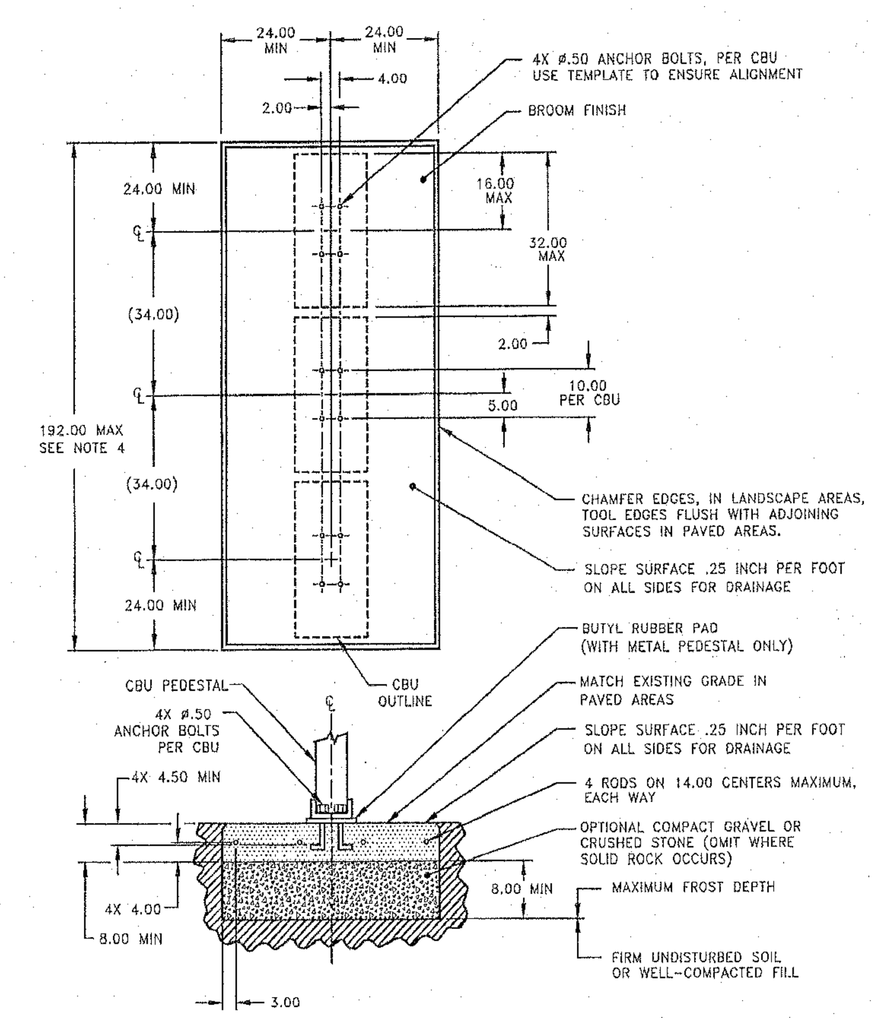

NOTES:

1. CONCRETE SHALL HAVE A COMPRESSIVE STRENGTH OF 3000 PSI @ 28 DAYS, CONTAIN 4% MIN – 6% MAX AIR ENTRAINMENT AND BE PLACED WITH A 3.50 – 4.50 SLUMP IN ACCORDANCE WITH ACI 301.
2. REINFORCING STEEL RODS SHALL CONFORM TO ASTM A615, GRADE 60.
3. ANCHOR BOLTS SHALL CONFORM TO ASTM A193, GRADE B8M, TYPE 316 STAINLESS STEEL.
4. A 3 CBU CONFIGURATION IS DEPICTED. A 2 OR 4 CBU CONFIGURATION MAY BE USED AS LONG AS THEY ARE ARRANGED IN GROUPS SUCH THAT THE OVERALL DIMENSION OF THE CONCRETE BASE DOES NOT EXCEED 192 INCHES.

CLUSTER BOX UNIT (CBU)
-ANCHORING METHODS-

CBU's must be level and mounted firmly in concrete, using one of the following methods.

1. The J-bolt method is the preferred method of installation of CBU's on concrete pads; however, the J-bolt pattern must be accurate with the CBU pedestal plate. When using J-bolts, in order to prevent any damage or accidents that could result from the exposed bolts, consideration should be given as to the time lapse between pouring the concrete and the actual installation. Expansion anchors must be installed in accordance with the manufacturer's instructions.
2. The use of anchor bolts for the installation of CBU's on concrete pads is also acceptable as long as the methods described below are followed.
   a. Hilti Kwik bolt II, 1/2" diameter X 5-1/2" overall length
      Catalog Number: 000-453-696, KB II 12-512
      Stainless Steel Catalog Number: 000-454-744
      Minimum embedment in concrete must be no less than 3-1/2"
   b. ITW Ramset Redhead Trublot, galvanized, 1/2" diameter X 7" overall length
   c. Rawl Stud, 1/2" diameter X 5 1/2" overall length, galvanized.
      Catalog Number: 7324
      Minimum embedment in concrete must be no less than 4"

CLUSTER BOX UNIT (CBU)
-CONCRETE PAD REQUIREMENTS-

- ALL FREE STANDING PADS MUST BE 8" THICK -

1 UNIT	SINGLE PAD	4' X 4'
2 UNITS	DOUBLE PAD	4' X 7'
3 UNITS	TRIPLE PAD	4' X 10'
4 UNITS	QUAD PAD	4' X 13'

*** **WHEN PLACING A PARCEL LOCKER AT ANY CBU LOCATION, INCREASE THE PAD SIZE BY AN ADDITIONAL 4' X 4'** ***

POSTAL SERVICE DETAILS
FOR MULTI-UNIT CBU PLACEMENT

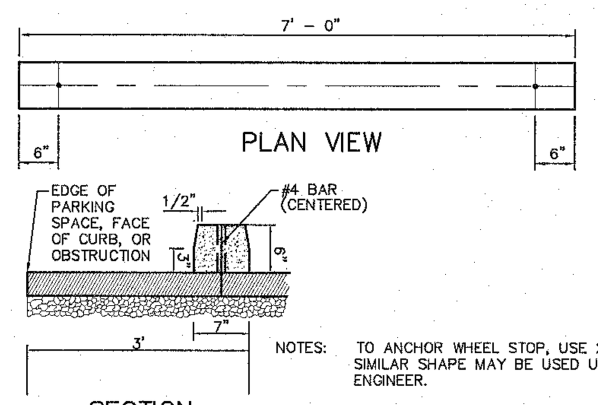

NOTES: TO ANCHOR WHEEL STOP, USE 2 – #4 BARS 24" LONG SIMILAR SHAPE MAY BE USED UPON APPROVAL OF THE ENGINEER.

PRECAST CONCRETE WHEELSTOP

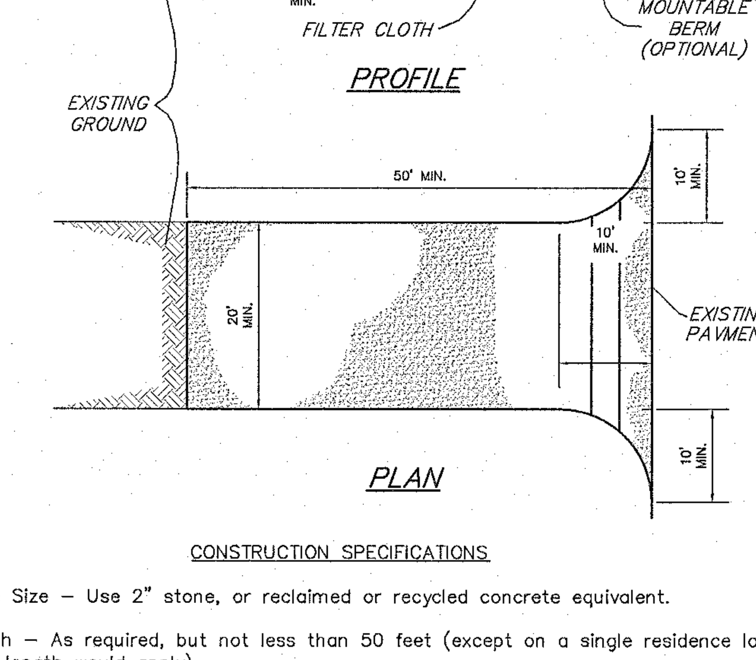

CONSTRUCTION SPECIFICATIONS

1. Stone Size – Use 2" stone, or reclaimed or recycled concrete equivalent.
2. Length – As required, but not less than 50 feet (except on a single residence lot where a 30 foot minimum length would apply).
3. Thickness – Not less than six (6) inches.
4. Width – Twenty (20) foot minimum, but not less than the full width at points where ingress or egress occurs.
5. Filter Cloth – Will be placed over the entire area prior to placing of stone. Filter will not be required on a single family residence lot.
6. Surface Water – All surface water flowing or diverted toward construction entrances shall be piped across the entrance. If piping is impractical, a mountable berm with 5:1 slopes will be permitted.
7. Maintenance – The entrance shall be maintained in a condition which will prevent tracking or flowing of sediment onto public rights-of-way. This may require periodic top dressing with additional stone as conditions demand and repair and/or cleanout of any measures used to trap sediment. All sediment spilled, dropped, washed or tracked onto public rights-of-way must be removed immediately.
8. Washing – Wheels shall be cleaned to remove sediment prior to entrance onto public rights-of-way. When washing is required, it shall be done on an area stabilized with stone and which drains into an approved sediment trapping device.
9. Periodic inspection and needed maintenance shall be provided after each rain.

STABILIZED CONSTRUCTION ENTRANCE/WASHDOWN AREA
NOT TO SCALE

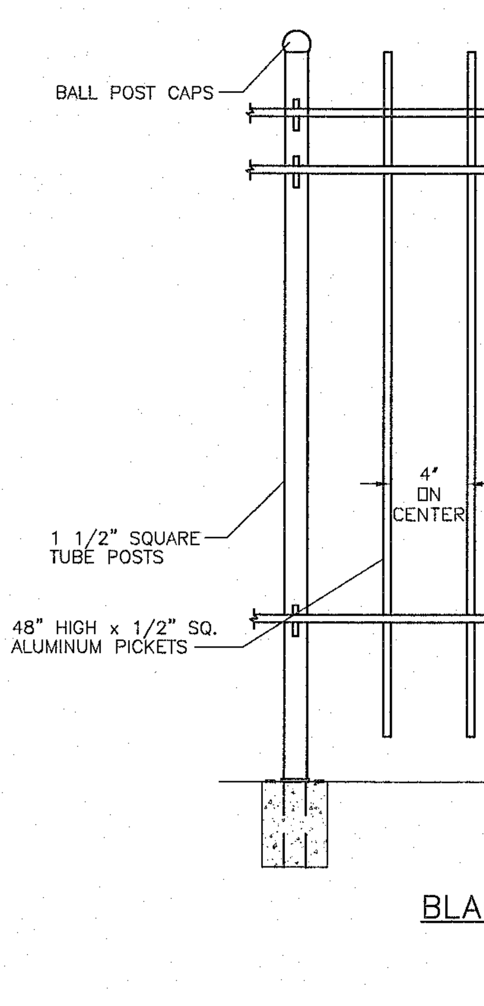

BLACK ALUMINUM FENCE
NOT TO SCALE

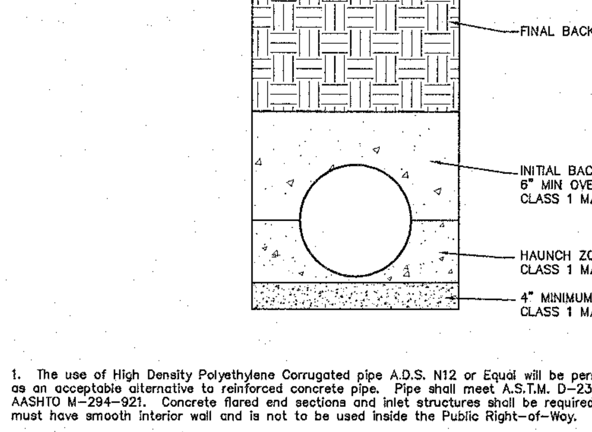

1. The use of High Density Polyethylene Corrugated pipe A.D.S. N12 or Equal will be permitted as an acceptable alternative to reinforced concrete pipe. Pipe shall meet A.S.T.M. D-2321 and AASHTO M-294-921. Concrete flared end sections and inlet structures shall be required. Pipe must have smooth interior wall and is not to be used inside the Public Right-of-Way.

All concrete pipe or HDPE pipe shall be installed with o-ring rubber type gaskets per M.S.D. Standard Construction Specifications or Manufacturer.

2. In typical conditions the minimum trench width is determined by the size of the pipe and the ability to get compaction equipment between the pipe and the trench walls. The minimum trench width should not be less than the outside diameter plus 16 inches or the pipe outside diameter times 1.25 plus 12 inches; whichever is greater. High speed trenchers may enable satisfactory installation of pipe in narrower trenches. Poor insitu soil conditions such as peat, muck, running sands, or expansive clays will require substantially wider backfill as well as deeper foundation and bedding. Trench width and foundation depth should be based on a thorough site investigation.

3. Backfill in the area up to the springline should be carefully placed and compacted to achieve a minimum E value of 1,000 psi as detailed in ASTM D2321. A minimum of 12" of backfill should be placed and compacted above the crown of the pipe. It is typical for trenches to be backfilled entirely with Type I or Type II materials when under pavement.

4. Flexible pipe should never be installed in a concrete cradle, as done for rigid pipe in a Class A installation. This type of installation could create concentrated forces at the ends of the cradle when the pipe has deformed.

H.D.P.E. PIPE DETAIL

NORTH AMERICAN GREEN
EROSION CONTROL *Products*
Guaranteed SOLUTIONS

14649 HIGHWAY 41 NORTH
EVANSVILLE, IN 47725
800-772-2040
www.nagreen.com

CHANNEL INSTALLATION
APLICACIONES PARA CANALES

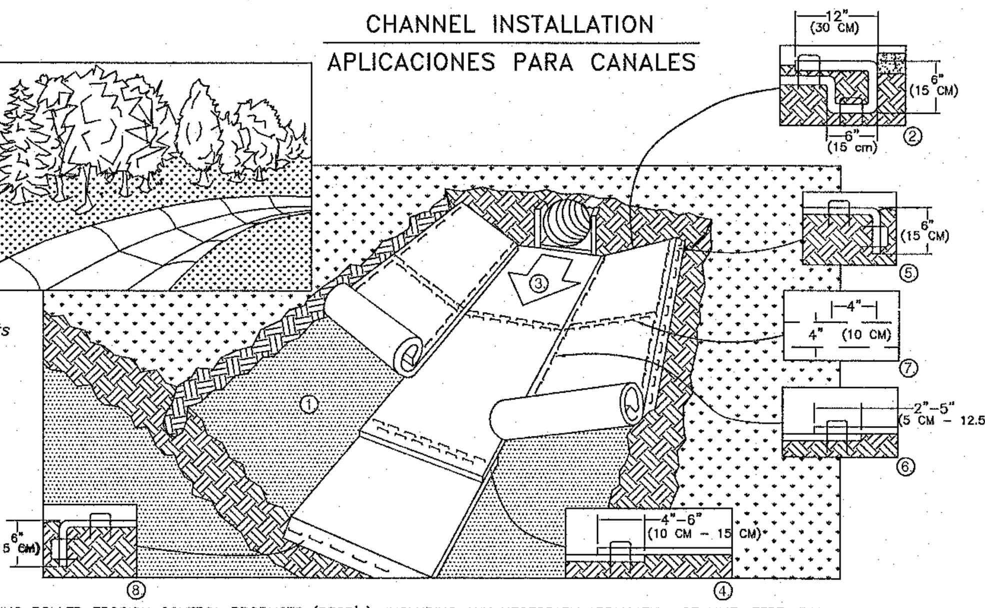

1. PREPARE SOIL BEFORE INSTALLING ROLLED EROSION CONTROL PRODUCTS (RECP's), INCLUDING ANY NECESSARY APPLICATION OF LIME, FERTILIZER, AND SEED. NOTE: WHEN USING CELL-O-SEED DO NOT SEED PREPARED AREA. CELL-O-SEED MUST BE INSTALLED WITH PAPER SIDE DOWN.
2. BEGIN AT THE TOP OF THE CHANNEL BY ANCHORING THE RECP's IN A 6" (15 CM) DEEP X 6" (15 CM) WIDE TRENCH WITH APPROXIMATELY 12" (30 CM) OF RECP's EXTENDED BEYOND THE UP-SLOPE PORTION OF THE TRENCH. ANCHOR THE RECP's WITH A ROW OF STAPLES/STAKES APPROXIMATELY 12" (30 CM) APART IN THE BOTTOM OF THE TRENCH. BACKFILL AND COMAPCT THE TRENCH AFTER STAPLING. APPLY SEED TO COMPACTED SOIL AND FOLD REMAINING 12" (30 CM) PORTION OF RECP's BACK OVER SEED AND COMPACTED SOIL. SECURE RECP's OVER COMPACTED SOIL WITH A ROW OF STAPLES/STAKES SPACED APPROXIMATELY 12" (30 CM) ACROSS THE WIDTH OF THE RECP's.
3. ROLL CENTER RECP's IN DIRECTION OF WATER FLOW IN BOTTOM OF CHANNEL. RECP's WILL UNROLL WITH APPROPRIATE SIDE AGAINST THE SOIL SURFACE. ALL RECP's MUST BE SECURELY FASTENED TO SOIL SURFACE BY PLACING STAPLES/STAKES IN APPROPRIATE LOCATIONS AS SHOWN IN THE STAPLE PATTERN GUIDE. WHEN USING THE DOT SYSTEM™, STAPLES/STAKES SHOULD BE PLACED THROUGH EACH OF THE COLORED DOTS CORRESPONDING TO THE APPROPRIATE STAPLE PATTERN.
4. PLACE CONSECUTIVE RECP's END OVER END (SHINGLE STYLE) WITH A 4" – 6" (10 CM –15 CM) OVERLAP. USE A DOUBLE ROW OF STAPLES STAGGERED 4" (10 CM) APART AND 4" (10 CM) ON CENTER TO SECURE RECP's.
5. FULL LENGTH EDGE OF RECP's AT TOP OF SIDE SLOPES MUST BE ANCHORED WITH A ROW OF STAPLES/STAKES APPROXIMATELY 12" (30 CM) APART IN A 6" (15 CM) DEEP X 6" (15 CM) WIDE TRENCH. BACKFILL AND COMPACT THE TRENCH AFTER STAPLING.
6. ADJACENT RECP's MUST BE OVERLAPPED APPROXIMATELY 2" – 5" (5 CM –12.5 CM) (DEPENDING ON RECP's TYPE) AND STAPLED.
7. IN HIGH FLOW CHANNEL APPLICATIONS, A STAPLE CHECK SLOT IS RECOMMENDED AT 30 TO 40 FOOT (9 M – 12 M) INTERVALS. USE A DOUBLE ROW OF STAPLES STAGGERED 4" (10 CM) APART AND 4" (10 CM) ON CENTER OVER ENTIRE WIDTH OF THE CHANNEL.
8. THE TERMINAL END OF THE RECP's MUST BE ANCHORED WITH A ROW OF STAPLES/STAKES APPROXIMATELY 12" (30 CM) APART IN A 6" (15 CM) DEEP X 6" (15 CM) WIDE TRENCH. BACKFILL AND COMPACT THE TRENCH AFTER STAPLING.

NOTE:
* IN LOOSE SOIL CONDITIONS, THE USE OF STAPLE OR STAKE LENGTHS GREATER THAN 6" (15 CM) MAY BE NECESSARY TO PROPERLY ANCHOR THE RECP's.

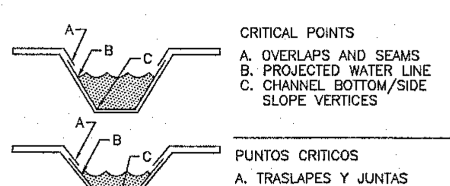

CRITICAL POINTS
A. OVERLAPS AND SEAMS
B. PROJECTED WATER LINE
C. CHANNEL BOTTOM/SIDE SLOPE VERTICES

NOTE:
* HORIZONTAL STAPLE SPACING SHOULD BE ALTERED IF NECESSARY TO ALLOW STAPLES TO SECURE THE CRITICAL POINTS ALONG THE CHANNEL SURFACE.
** IN LOOSE SOIL CONDITIONS, THE USE OF STAPLE OR STAKE LENGTHS GREATER THAN 6" (15 cm) MAY BE NECESSARY TO PROPERLY ANCHOR THE RECP's.

PUNTOS CRITICOS
A. TRASLAPES Y JUNTAS
B. LINEAS DE AGUA PROYECTADA
C. FONDO DEL CANAL/VERTICES DE LAS PENDIENTES LATERALES

NOTA:
* LA SEPARACION HORIZONTAL DE LAS GRAPAS SE DEBE ALTERAR SI SE NECESITA, PARA PERMITIR QUE LAS GRAPAS ASEGUREN LOS PUNTOS CRITICOS A LO LARGO DE LA SUPERFICIE DEL CANAL.
** EN CONDICIONES DE SUELO SUELTO, PUEDE QUE SE NECESITEN GRAPAS O ESTACAS DE MAS DE 6" (15 CM) DE LARGO PARA ASEGURAR LAS MANTAS CORRECTAMENTE.

1. PREPARE EL SUELO DE COLOCAR LAS MANTAS, INCLUYENDO LA APLICASION DE CAL, FERTILIZANTE SEMILLA. NOTA: CUANDO ESTE USANDO CELL-O-SEED NO SIEMBRE EL AREA PREPARADA. CELL-O-SEED TIENE QUE INSTALARSE CON EL LADO DE PAPEL HACIA ABAJO.
2. COMIENCE EN LA CABECERA DEL CANAL SUJETANDO LA MANTA EN UNA ZANJA DE 6" (15 CM) DE PROFUNDIDAD POR 6" (15 CM). DE ANCHO CON APROXIMADAMENTE 12" (30 CM) DE LA MANTA EXTENDIDA MAS ALLA DE LA PENDIENTE ALTA DE LA ZANJA. SUJETE RELLENE Y COMPACTE LA ZANJA DESPUES DEL ENGRAPE. RIEGUE LA SEMILLA EN EL SUELO COMPACTADO Y DOBLE LAS 12" (30 CM) REMANENTES DE MANTA SOBRE LA SEMILLA Y EL SUELO COMPACTADO. ASEGURE LA MANTA SOBRE EL SUELO CON UNA LINEADE GRAPAS O ESTACAS APROXIMADAMENTE 12" (30 CM) UNA DE LA OTRA A TRAVES DEL ANCHO DE LA MANTA.
3. DESENROLLE LA MANTA DEL MEDIO EN EL FONDO DEL CANAL Y EN LA DIRECCION DEL FLUJO DE AGUA CON EL LADO APROPIADO HACIA LA SUPERFICIE DEL SUELO. TODAS LAS MANTAS DEBERAN ASEGURARSE A LA SUPERFICIE DEL SUELO POR MEDIO DE GRAPAS O ESTACAS EN LUGARESAPROPIADOS TAL Y COMO SE INDICA EN EL PATRON GUIA DE ENGRAPADO. CUANDO ESTE USANDO EL DOT SYSTEM™. LAS GRAPAS O ESTACAS DEBEN COLOCARSE A TRAVES DE CADA UNO DE LOS PUNTOS CON COLOR CORRESPONDIENTES AL PATRON DE ENGRAPADO APROPIADO.
4. COLOQUE LAS MANTAS CONSECUTIVAS BORDE SOBRE BORDE (TIPO ESCALONADO) CON UN TRASLAPE DE 4" – 6" (10 CM – 15 CM). USE UNA LINEA DOBLE DE GRAPAS ESCALONADAS, SEPARADAS POR 4" (10 CM) Y CADA 4" (10 CM) SOBRE EL CENTRO PARA ASEGURAR LAS MANTAS.
5. EN EL TOPE DE LAS DOS PENDIENTES LATERALES DEL CANAL, SE DEBE SUJETAR TODO EL LARGO DE LA ORILLA DE LAS MANTAS CON UNA LINEA DE GRAPAS O ESTACAS APROXIMADAMENTE CADA 12" (30 CM) UNA DE LA OTRA EN UNA ZANJA DE 6" (15 CM) DE PROFUNDIDAD POR 6" (15 CM) DE ANCHO. RELLENE Y COMPACTE LA ZANJA DESPUES DEL ENGRAPE.
6. LAS MANTAS ADYACENTES DEBEN TRASLAPARSE APROXIMADAMENTE DE 2" – 5" (5 CM– 12.5 CM) (DEPENDIENDO DEL TIPO DE. MANTA) Y ENGRAPPARSE.
7. EN APLICACIONES PARA CANALES DE FLUJO ALTO, SE RECOMIENDA DEJAR UNA RANURA PARA EL CHEQUEO DE LAS GRAPAS A INTERVALOS DE 30 A 40 PIES (9 M – 12 M). USE UNA LINEA DOBLE DE PRAPAS ESCALONADAS, SEPARADAS POR 4" (10 CM) Y CADA 4" (10 CM) SOBRE EL CENTRO A TRAVES DE TODO EL ANCHO DEL CANAL.
8. LOS BORDES FINALES DE LAS MANTAS DEBEN SUJETARSE CON UNA LINEA DE GRAPAS O ESTACAS APROXIMADAMENTE CADA 12" 30 CM) UNA DE LA OTRA EN UNA ZANJA DE 6" (15 CM) DE PROFUNDIDAD POR 6" (15 CM) DE ANCHO. RELLENE Y COMPACTE DESPUES DEL ENGRAPADO.

NOTA:
* EN CONDICIONES DE SUELTO, PUEDE QUE SE NECESITEN GRAPAS O ESTACAS DE MAS DE 6" (15 CM) DE LARGO PARA ASEGURAR LAS MANTAS CORRECTAMENTE.

REV. 01/05

ROLLMAX™
ROLLED EROSION CONTROL

Specification Sheet – EroNet™ DS150™ Erosion Control Blanket

DESCRIPTION

The ultra short-term double net erosion control blanket shall be a machine-produced mat of 100% agricultural straw with a functional longevity of up to 2 months. (NOTE: functional longevity may vary depending upon climatic conditions, soil, geographical location, and elevation). The blanket shall be of consistent thickness with the straw evenly distributed over the entire area of the mat. The blanket shall be covered on the top and bottom sides with a polypropylene netting having an approximate 0.50 x 0.50 (1.27 x 1.27 cm) mesh with photodegradable accelerators to provide breakdown of the netting within approximately 60 days, depending upon geographical location and elevation. The blanket shall be sewn together on 1.50 inch (3.81 cm) centers with degradable thread. The blanket shall be manufactured with a colored thread stitched along both outer edges (approximately 2-5 inches [5-12.5 cm] from the edge) as an overlap guide for adjacent mats.

The DS150 shall meet Type 1.D specification requirements established by the Erosion Control Technology Council (ECTC) and Federal Highway Administration's (FHWA) FP-03 Section 713.17

Material Content		
Matrix	100% Straw Fiber	0.5 lbs/sq yd (0.27 kg/sm)
Netting	Top and bottom nets, lightweight photodegradable with photo accelerators	1.5 lb/1000 sq ft (0.73 g/sm)
Thread	Degradable	

Standard Roll Sizes			
Width	6.67 (2.03 m)	8.0 ft (2.4 m)	16 ft (4.87 m)
Length	108 ft (32.92 m)	112 ft (34.14 m)	108 ft (32.92 m)
Weight ± 10%	40 lbs (18.14 kg)	50 lbs (22.68 kg)	96 lbs (43.54 kg)
Area	80 sq yd (66.9 sm)	100 sq yd (83.61 sm)	192 sq yd (165.5 sm)

Index Property	Test Method	Typical
Thickness	ASTM D6525	0.35 in. (8.89 mm)
Resiliency	ECTC Guidelines	80.5%
Water Absorbency	ASTM D1117	423%
Mass/Unit Area	ASTM 6475	9.25 oz/sy (314.5 g/sm)
Swell	ECTC Guidelines	15%
Smolder Resistance	ECTC Guidelines	Yes
Stiffness	ASTM D1388	6.06 oz-in
Light Penetration	ASTM D6567	5.6%
Tensile Strength - MD	ASTM D6818	201.6 lbs/ft (2.99 kN/m)
Elongation - MD	ASTM D6818	28.9%
Tensile Strength - TD	ASTM D6818	72.0 lbs/ft (1.07 kN/m)
Elongation - TD	ASTM D6818	27.7%
Biomass Improvement	ASTM 7322	283%

Design Permissible Shear Stress	
Unvegetated Shear Stress	1.75 psf (84 Pa)
Unvegetated Velocity	6.00 fps (1.83 m/s)

Slope Design Data: C Factors			
	Slope Gradients (S)		
Slope Length (L)	≤ 3:1	3:1 – 2:1	≥ 2:1
≤ 20 ft (6 m)	0.004	0.106	N/A
20-50 ft	0.062	0.118	N/A
≥ 50 ft (15.2 m)	0.12	0.180	N/A

Roughness Coefficients – Unveg.	
Flow Depth	Manning's n
≤ 0.50 ft (0.15 m)	0.055
0.50 – 2.0 ft	0.055-0.021
≥ 2.0 ft (0.60 m)	0.021

NORTH AMERICAN GREEN
North American Green
5401 St. Wendel-Cynthiana Road
Poseyville, Indiana 47633
nagreen.com
800-772-2040

©2017, North American Green is a registered trademark. Certain products and/or applications described or illustrated herein are protected under one or more U.S. patents. Other U.S. patents are pending, and certain foreign patents and patent applications may also exist. Trademark rights also apply as indicated herein. Final determination of the suitability of any information or material for the use contemplated, and its manner of use, is the sole responsibility of the user. Printed in the U.S.A.

EC_RMX_MPDS_DS150_5.13

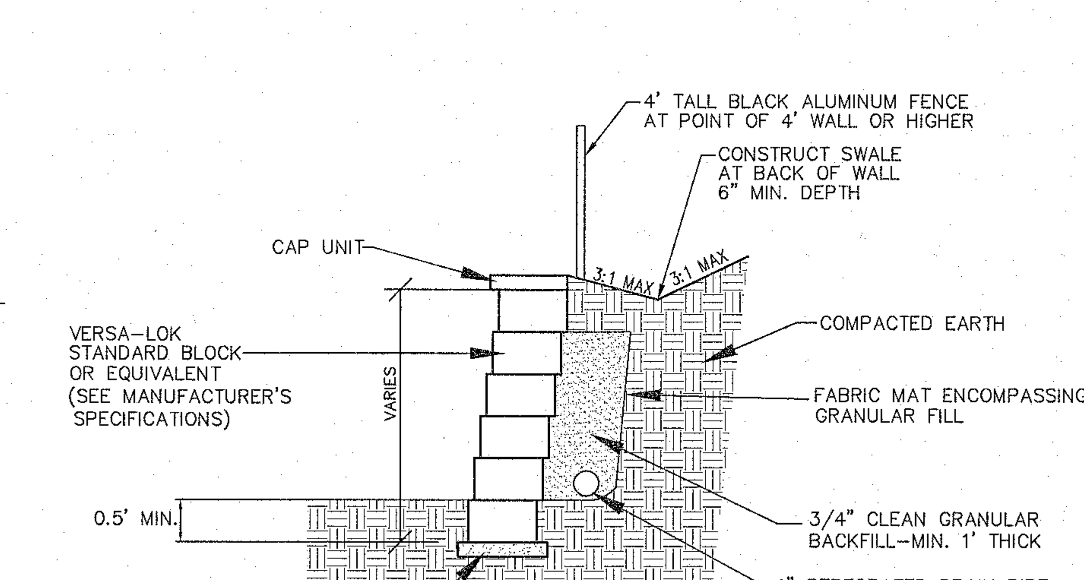

SEE MANUFACTURER'S SPECIFICATIONS FOR INSTALLATION PROCEDURE

MODULAR BLOCK CONCRETE RETAINING WALL
(RETAINING WALL DESIGN BY OTHERS) NOT TO SCALE

* WALL DESIGN TO TAKE INTO ACCOUNT ANY LOADING OR IMPACT THE PROPOSED FENCE WILL HAVE ON SAID WALL.

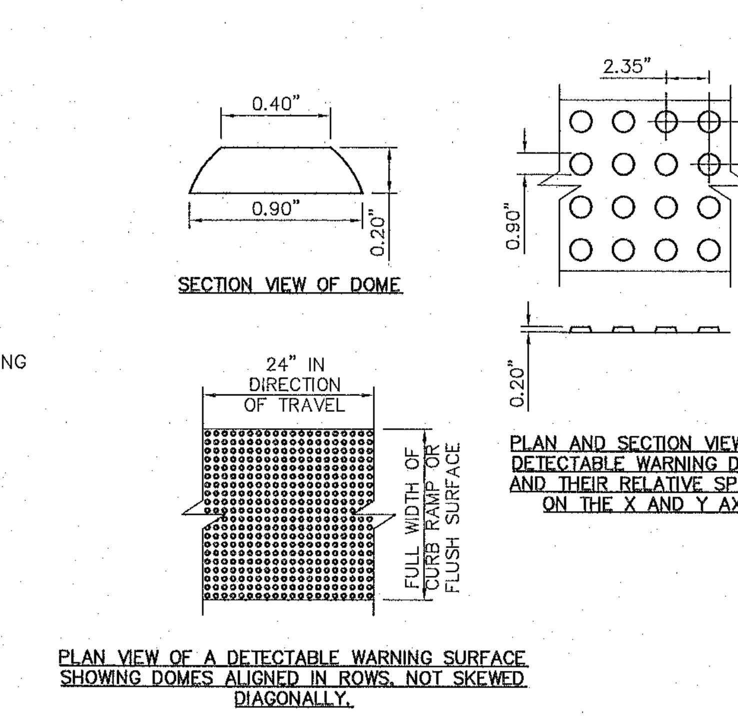

TYPICAL DETAIL OF DETECTABLE WARNING SURFACE
NOT TO SCALE

FLOW PATTERN
TYPICAL LOT
N.T.S.

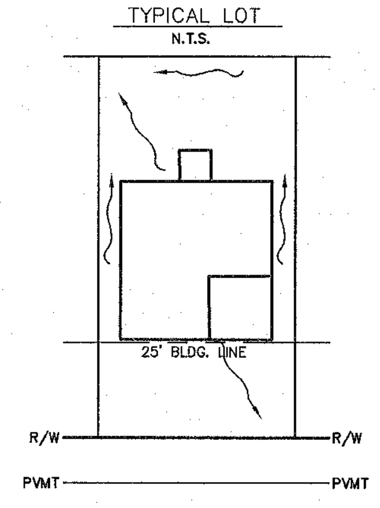

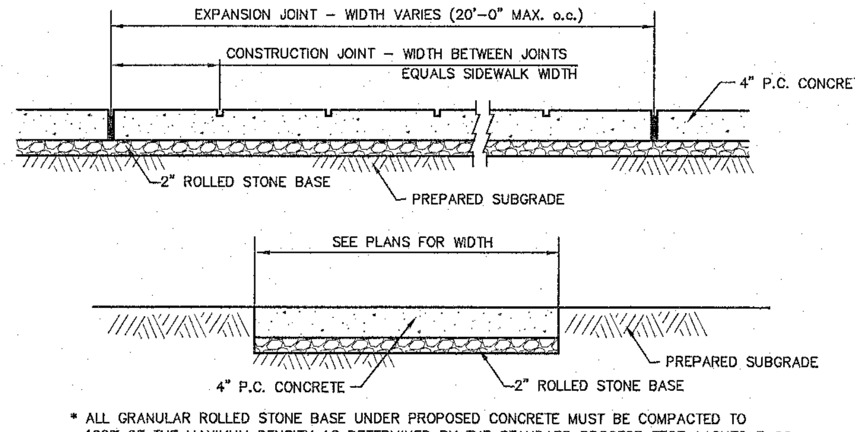

* ALL GRANULAR ROLLED STONE BASE UNDER PROPOSED CONCRETE MUST BE COMPACTED TO 100% OF THE MAXIMUM DENSITY AS DETERMINED BY THE STANDARD PROCTOR TEST AASHTO T-99. CONCRETE COMPRESSIVE STRENGTH SHALL BE 4000 PSI IN 28 DAYS.

CONCRETE SIDEWALK DETAIL
NOT TO SCALE

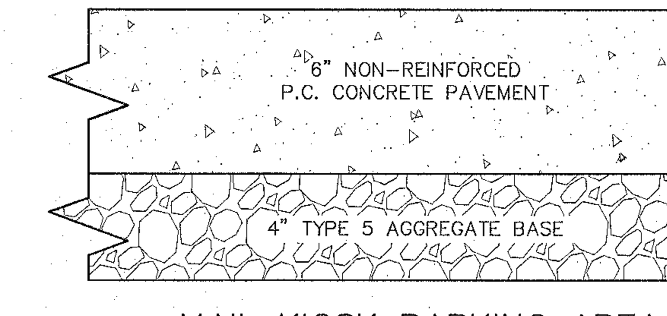

MAIL KIOSK PARKING AREA
CONCRETE PAVEMENT DETAIL
NOT TO SCALE
NOTE:
ALL NON-REINFORCED CONCRETE SHALL BE 4,000 P.S.I. AT 28 DAYS.

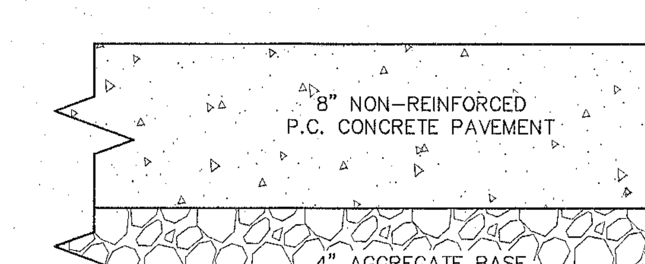

OLD HIGHWAY N ENTRANCE
CONCRETE PAVEMENT DETAIL
NOT TO SCALE
NOTE:
ALL NON-REINFORCED CONCRETE SHALL BE 4,000 P.S.I. AT 28 DAYS.

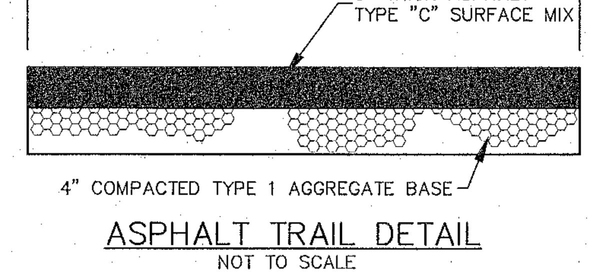

ASPHALT TRAIL DETAIL
NOT TO SCALE
NOTE:
THE ASPHALT SURFACE SHALL BE COMPACTED TO 98% MAXIMUM DENSITY.

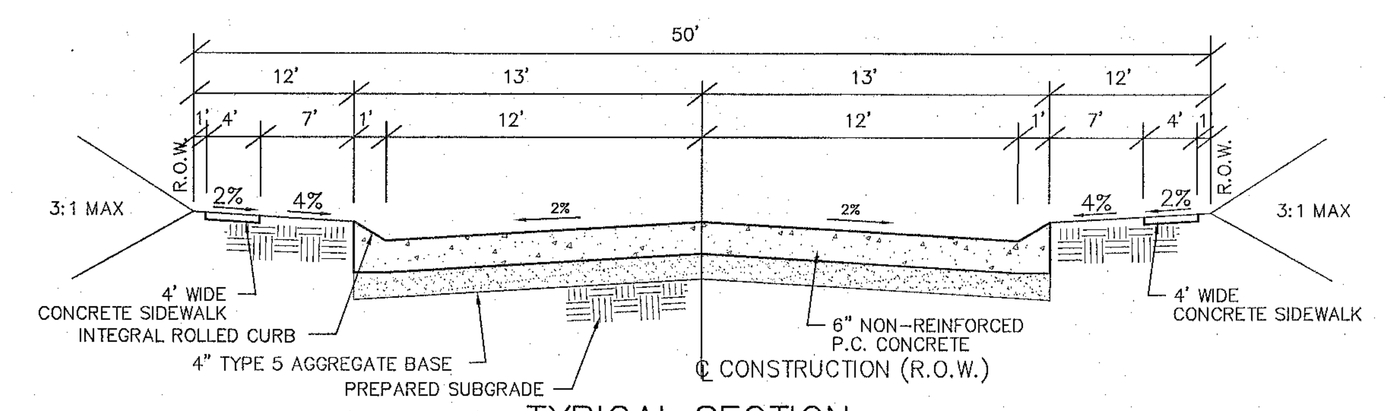

TYPICAL SECTION
NOT TO SCALE
(26' WIDE P.C. CONCRETE PAVEMENT)

*SIDEWALK LOCATION MAY VARY. SEE PLANS.

NOTE:
ALL NON-REINFORCED CONCRETE SHALL BE 4,000 P.S.I. AT 28 DAYS.

PROJECT TITLE:
LEGENDS POINTE
(formerly THE VILLAGES AT RHODES FARM)

Bax Project #12-15470B | Issue Date: 08/02/2017

ENGINEERING PLANNING SURVEYING
221 Point West Blvd.
St. Charles, MO 63301
636-928-5552
FAX 928-1718

DISCLAIMER OF RESPONSIBILITY
I hereby specify that the documents intended to be authenticated by my seal are limited to this sheet, and I hereby disclaim any responsibility for all other Drawings, Specifications, Estimates, Reports or other documents or instruments relating to or intended to be used for any part or parts of the architectural or engineering project or survey.

STATE OF MISSOURI
JEFFREY B SIMMONS
NUMBER PE-2007030831
PROFESSIONAL ENGINEER
12-21-2017

Jeffrey B. Simmons
CIVIL ENGINEER
2007030831

Copyright 2017
Bax Engineering Company, Inc.
Authority No. 000655
All Rights Reserved

REVISIONS

10/03/17	P.W.S.D.#2 COMMENTS
10/24/17	CLIENT COMMENTS
10/31/17	DUCKETT COMMENTS
11/01/17	CLIENT COMMENTS
11/05/17	CITY COMMENTS
11/29/17	MODOT COMMENTS
12/13/17	MODOT COMMENTS
12/21/17	CLIENT COMMENTS

Developer / Owner:
KAPB, L.L.C.
410 CRESTVIEW DRIVE
O'FALLON, MO 63366
636-272-4200

CONSTRUCTION DETAILS

P+Z No.
#27-15.05, 05/11/17

City No.
#CITY

Page No.