A DETAIL SHEET FOR

LIBERTY INDUSTRIAL PARK

00-11060A 5-22-03

REVISIONS:
6-19-03 REVISED PER CITY
7-18-03 CITY COMMENTS

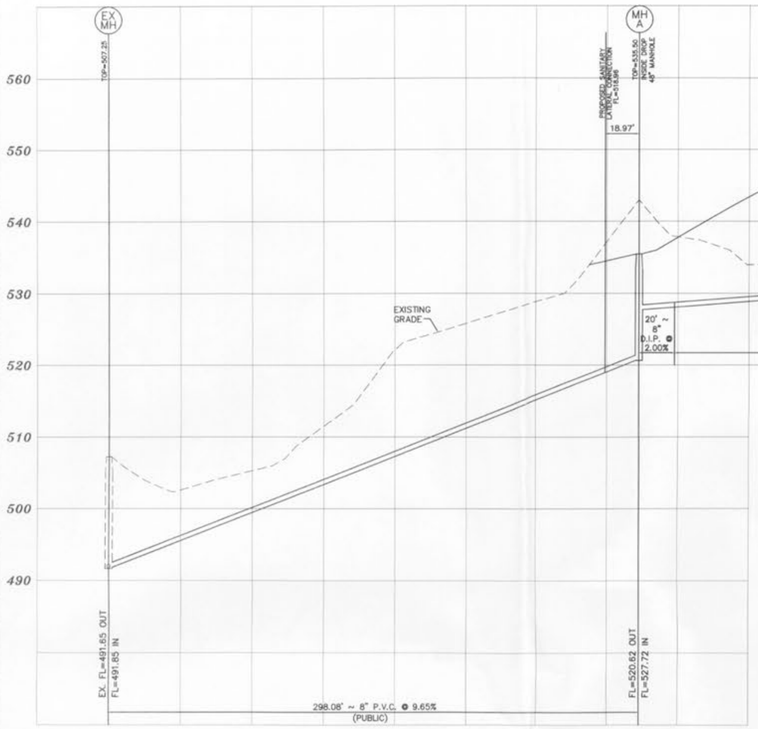

SANITARY SEWER PROFILE

SCALE: 1" = 10' VERTICAL
1" = 40' HORIZONTAL

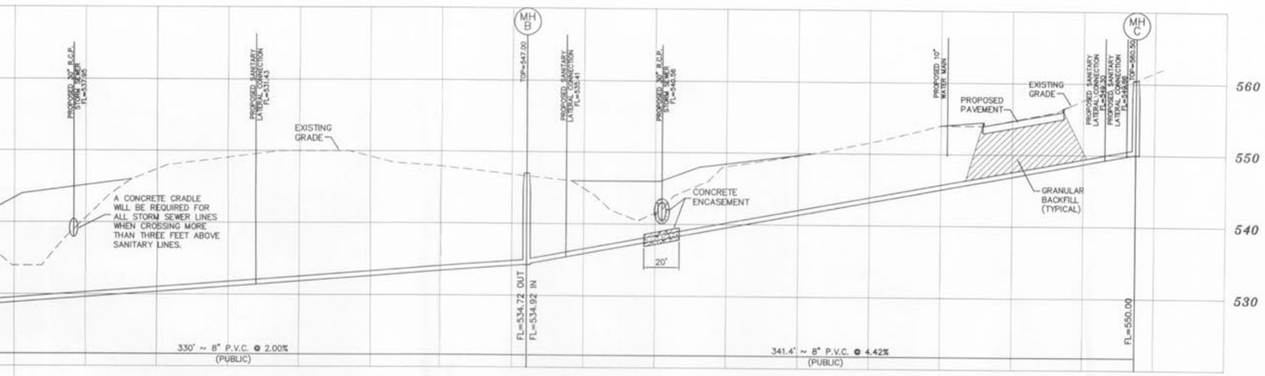

SANITARY SEWER PROFILE

SCALE: 1" = 10' VERTICAL
1" = 40' HORIZONTAL

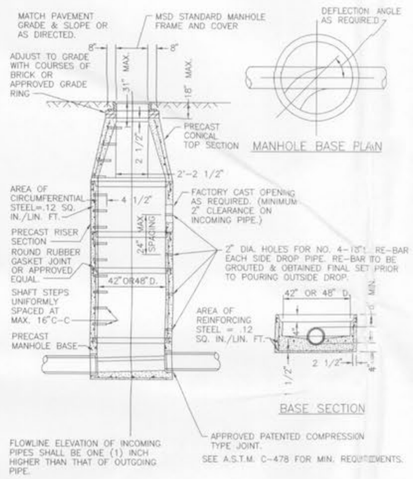

PRE-CAST CONCRETE MANHOLE FOR SEWERS 8" THROUGH 12"

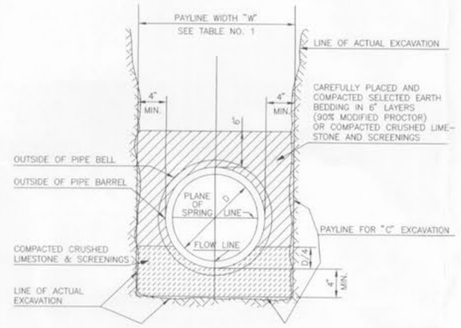

PIPE BEDDING CLASS "C" (FOR ALL PIPE EXCEPT REINFORCED CONCRETE PIPE)

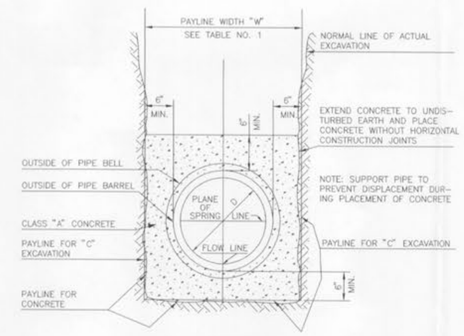

CONCRETE ENCASEMENT

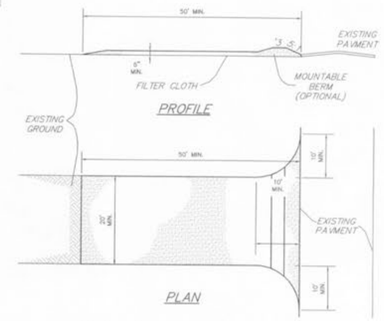

CONSTRUCTION SPECIFICATIONS

1. Stone Size – Use 2" stone, or reclaimed or recycled concrete equivalent.
2. Length – As required, but not less than 50 feet (except on a single residence lot where a 30 foot minimum length would apply).
3. Thickness – Not less than six (6) inches.
4. Width – Twenty (20) foot minimum, but not less than the full width at points where ingress or egress occurs.
5. Filter Cloth – Will be placed over the entire area prior to placing of stone. Filter will not be required on a single family residence lot.
6. Surface Water – All surface water flowing or diverted toward construction entrances shall be piped across the entrance. If piping is impractical, a mountable berm with 5:1 slopes will be permitted.
7. Maintenance – The entrance shall be maintained in a condition which will prevent tracking or flowing of sediment onto public rights-of-way. This may require periodic top dressing with additional stone as conditions demand and repair and/or cleanout of any measures used to trap sediment. All sediment spilled, dropped, washed or tracked onto public rights-of-way must be removed immediately.
8. Washing – Wheels shall be cleaned to remove sediment prior to entrance onto public rights-of-way. When washing is required, it shall be done on an area stabilized with stone and which drains into an approved sediment trapping device.
9. Periodic inspection and needed maintenance shall be provided after each rain.

STABILIZED CONSTRUCTION ENTRANCE/WASHDOWN AREA

NOT TO SCALE

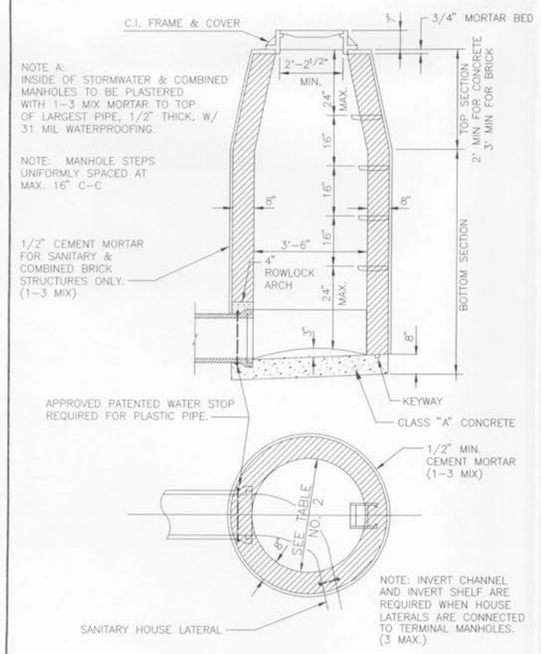

TERMINAL MANHOLE

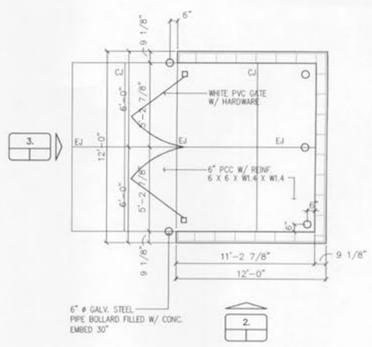

1. TRASH ENCLOSURE PLAN
NOT TO SCALE

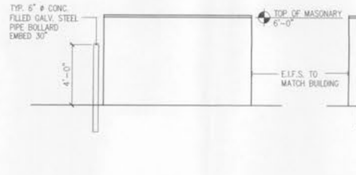

2. ELEVATION
NOT TO SCALE

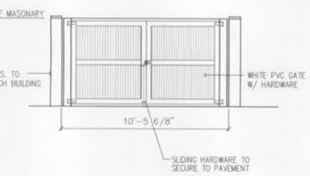

3. ELEVATION
NOT TO SCALE

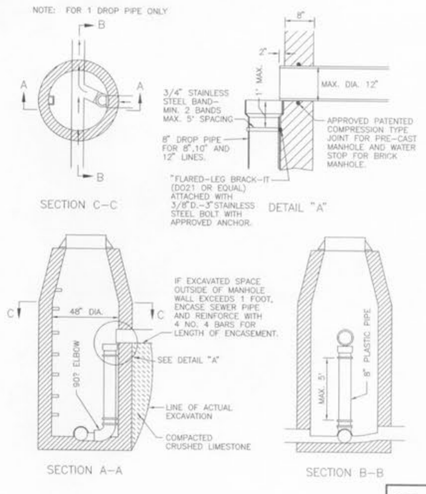

FOUL WATER
INSIDE DROP MANHOLE
FOR PLASTIC PIPE

O'FALLON CITY NUMBER #7701

E:\DWG\11000PLTS\11060 - Liberty Industrial\Construction\11060ACON.dwg, 07/18/03 11:26:06 AM, STATION 98 ALJ