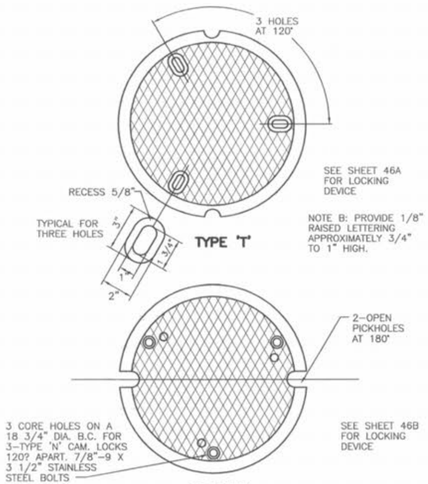

CAST IRON MANHOLE COVERS (LOCK TYPE)

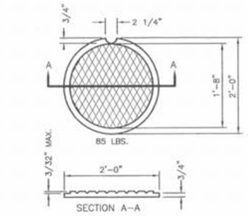

STANDARD CAST IRON INLET COVER

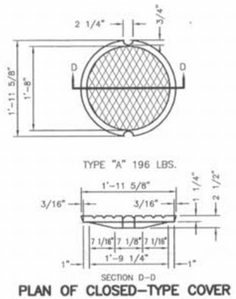

PLAN OF CLOSED-TYPE COVER

CAST IRON COVERS MANHOLES AND INLETS

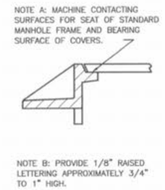

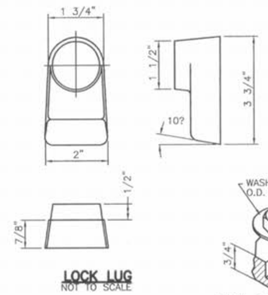

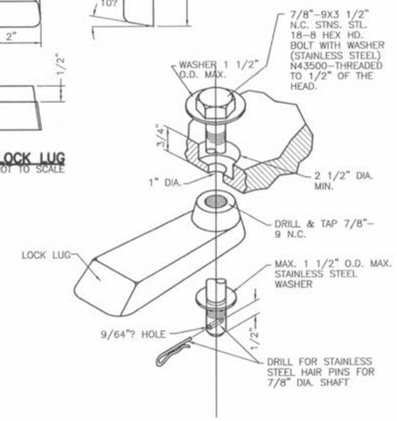

LOCKING DEVICE FOR TYPE 'N' LOCK TYPE MANHOLE COVER

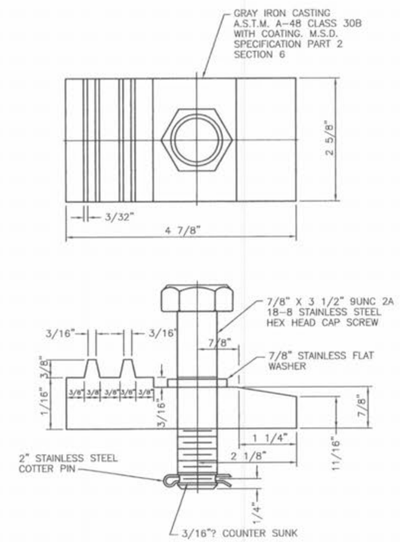

LOCKING DEVICE FOR TYPE 'T' LOCK TYPE MANHOLE COVER

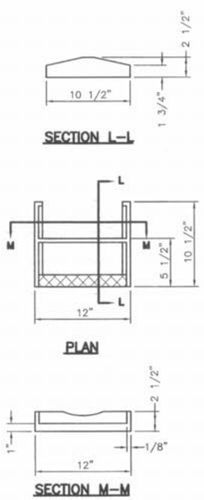

CAST IRON MANHOLE STEPS

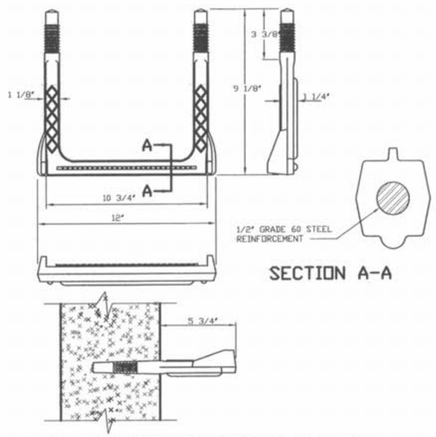

COPOLYMER POLYPROPYLENE PLASTIC MANHOLE STEP FOR PRECAST MANHOLE

CITY OF O'FALLON
DEPARTMENT OF PUBLIC WORKS DESIGN GROUP
O'FALLON, MISSOURI

DISCLAIMER OF RESPONSIBILITY

SEAL

DESIGNED:
CHECKED:
DATE:
PROJECT NO.:

SHEET
OF

MAGNOLIA
SANITARY DETAILS 2

ST. CHARLES ENGINEERING & SURVEYING, INC.
801 S. FIFTH STREET, SUITE 202
ST. CHARLES, MO 63301
TEL: (636) 947-0607 FAX: (636) 947-2448

ORDER NO.
03-0498
DATE
12/1/03
D7