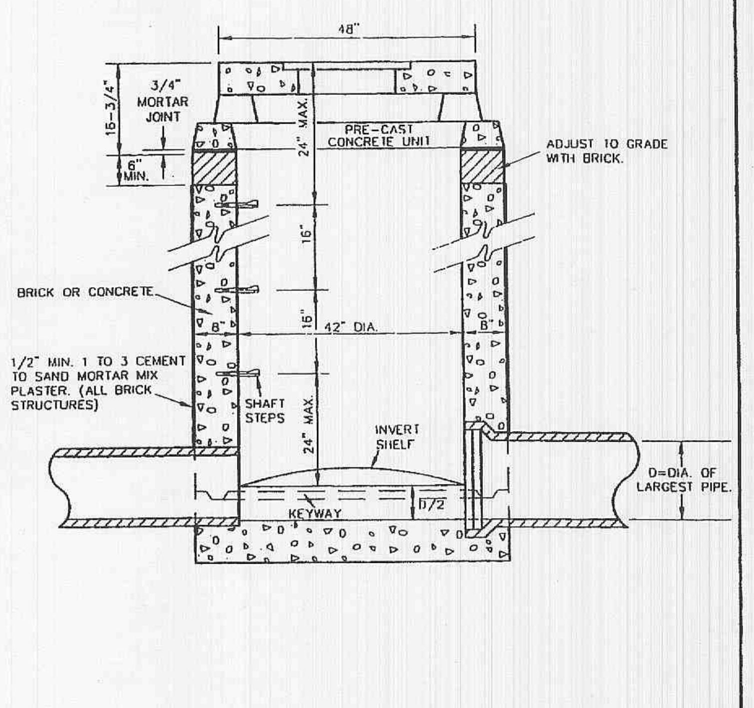

NOTE:
FOR SEWERS 27 INCH THRU 42 INCH SEE DETAIL SHEET 11 FOR BOTTOM SECTION.

AREA INLET MANHOLE (12" THRU 24")	METROPOLITAN ST. LOUIS SEWER DISTRICT *Standard Details of Sewer Construction*		
	Dr. RGW/SAM Ch. J.C.K.	2000	SHEET 30

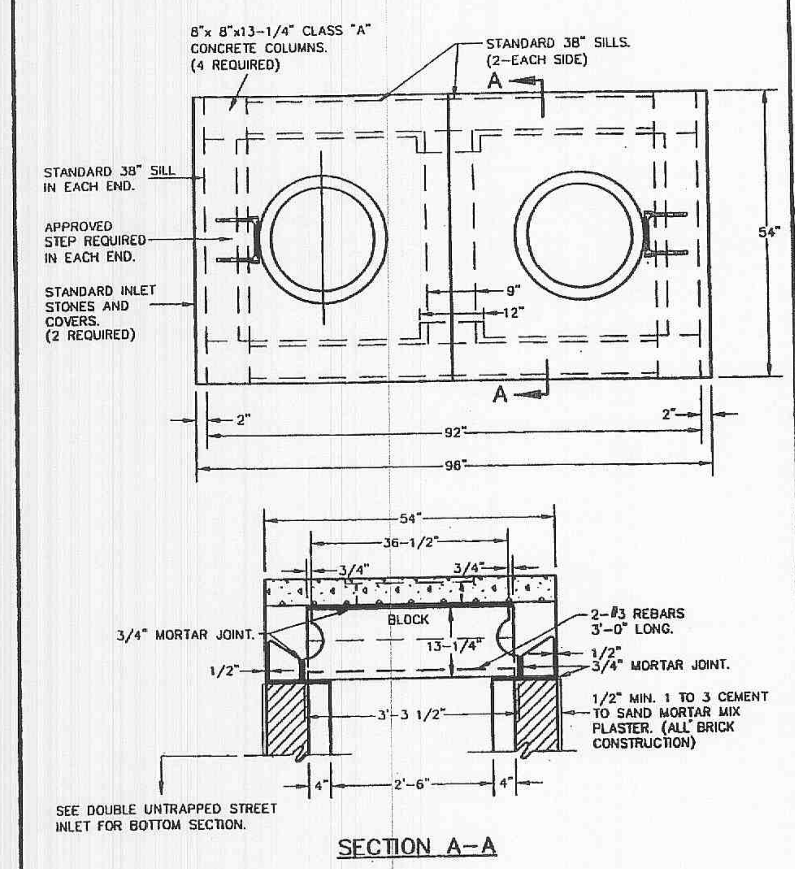

NOTE:
STANDARD DEPTH = 4.0 FEET.

DOUBLE AREA INLET OPEN 4 SIDES BRICK CONSTRUCTION	METROPOLITAN ST. LOUIS SEWER DISTRICT *Standard Details of Sewer Construction*		
	Dr. RGW/SAM Ch. J.C.K.	2000	SHEET 31

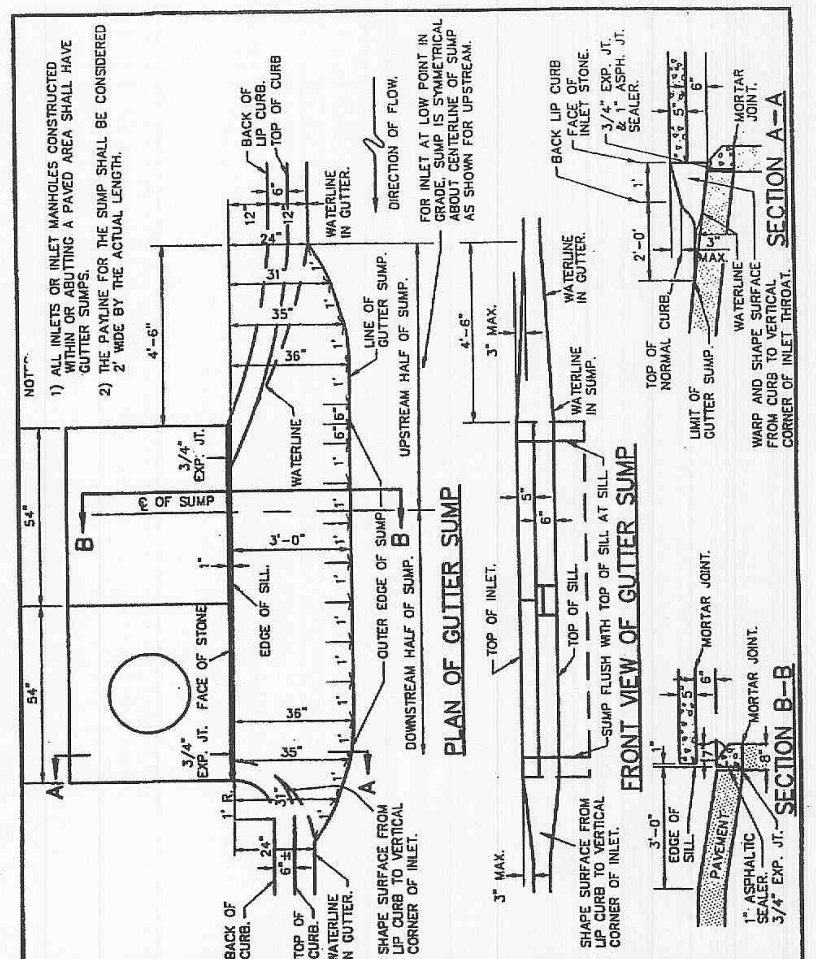

GUTTER SUMP FOR LIP CURB	METROPOLITAN ST. LOUIS SEWER DISTRICT *Standard Details of Sewer Construction*		
	Dr. RGW/SAM Ch. J.C.K.	2000	SHEET 60

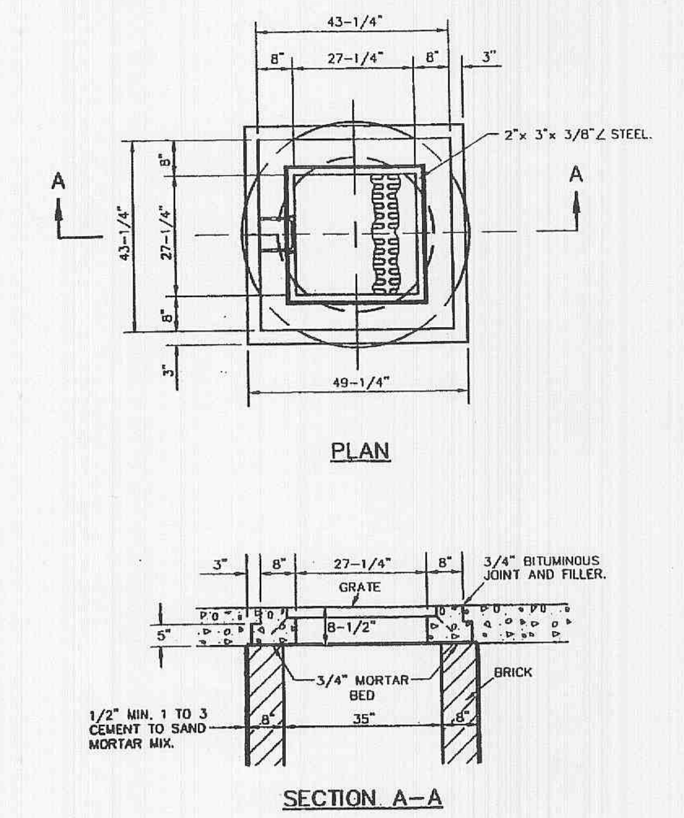

NOTES:
1) INLETS ON THIS SHEET ARE TO BE USED IN LOCATIONS WHERE STANDARD OPEN THROAT INLETS CANNOT BE IN PAVED TRAFFIC WAY AND IN LIMITED EASEMENTS.
2) STANDARD DEPTH = 4.0 FEET.

2 GRATE INLET BRICK CONSTRUCTION	METROPOLITAN ST. LOUIS SEWER DISTRICT *Standard Details of Sewer Construction*		
	Dr. RGW/SAM Ch. J.C.K.	2000	SHEET 32

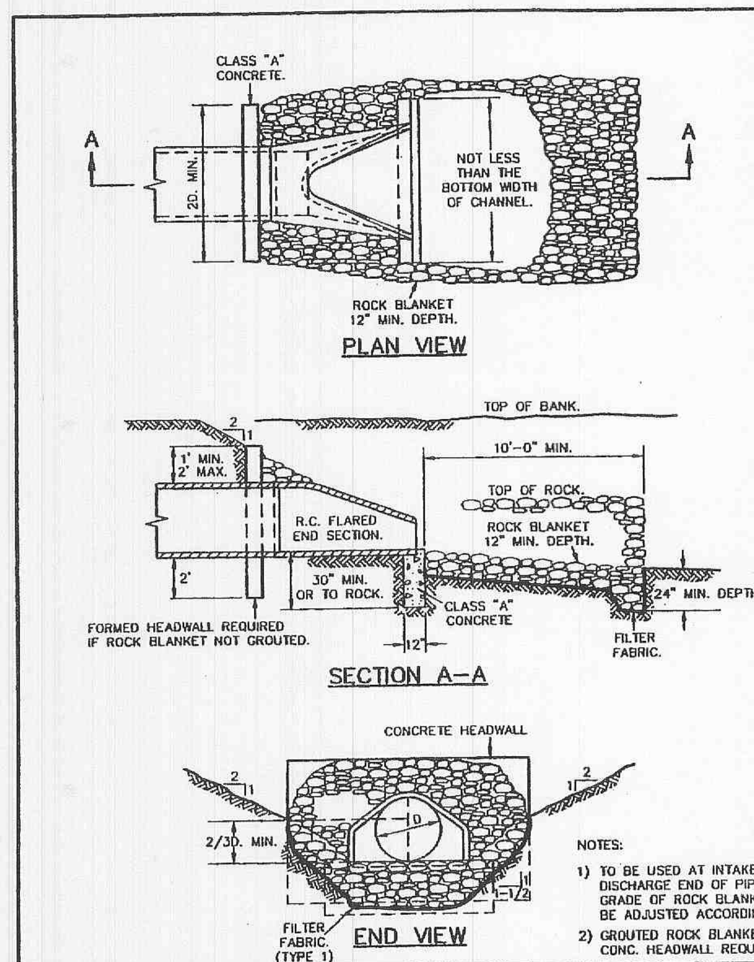

NOTES:
1) TO BE USED AT INTAKE AND DISCHARGE END OF PIPE. GRADE OF ROCK BLANKET TO BE ADJUSTED ACCORDINGLY.
2) GROUTED ROCK BLANKET OR CONC. HEADWALL REQUIRED.

FLARED END SECTION	METROPOLITAN ST. LOUIS SEWER DISTRICT *Standard Details of Sewer Construction*		
	Dr. WSH/SAM Ch. J.C.K.	2000	SHEET 61

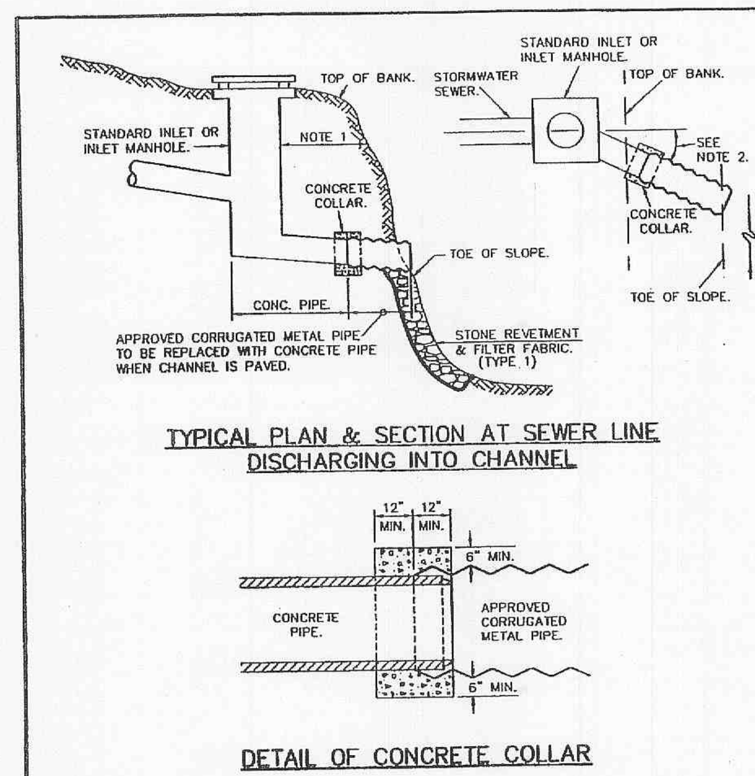

NOTES:
1) MECHANICALLY COMPACT BACKFILL IN TRENCHES OR CLOSURES OF ABANDONED CHANNELS TO DENSITY NOT LESS THAN THAT IN ADJACENT BANK. PROTECT WITH A BLANKET OF CRUSHED LIMESTONE OR PAVING WHERE NECESSARY.
2) 45 DEGREES AT UNPAVED CHANNELS AND FOR LARGE FLOWS ENTERING SMALL CHANNELS. 30 DEGREES AT PAVED CHANNELS AND FOR SMALL FLOWS ENTERING LARGE CHANNELS.
3) CHANNEL PAVING OR BANK PAVING OR BOTH MAY BE REQUIRED TO PREVENT EROSION AT CURVES IN ALIGNMENT OR AT LOCATIONS OF POSSIBLE EROSION DUE TO DISCHARGE OF LARGE FLOWS.

STORMWATER CHANNELS	METROPOLITAN ST. LOUIS SEWER DISTRICT *Standard Details of Sewer Construction*		
	Dr. RGW/SAM Ch. J.C.K.	2000	SHEET 62

PRECAST CONCRETE STORMWATER STRUCTURES

MINIMUM DISTANCE FLOWLINE TO TOP OF STONE OR GRATE

PIPE I.D. NOMINAL INCHES	AREA INLET CIRCULAR BASE DIA. 42"	48"	60"	(2) GRATE INLET CIRCULAR BASE DIA. 42"	48"	60"	SQUARE (MAX.)	SINGLE STREET INLET CIRCULAR BASE DIA. 42"	48"	60"	RECTANGLE (MAX.)
12"	45"			38"			31"	48"			41"
15"	48"			41"			34"	51"			44"
18"	52"			44"			37"	55"			48"
21"	55"			47"			40"	58"			51"
24"		58"			51"		44"		61"		54"
27"			78"			71"	NA			81"	NA
30"			82"			74"	NA			85"	NA
33"			85"			77"	NA			88"	NA

(SEE SHEET 35 FOR DETAIL) (SEE SHEET 36 FOR DETAIL) (SEE SHEET 37 FOR DETAIL)

NOTES:
1) 48" DIAMETER BASE REQUIRES 7" HIGH TRANSITION SECTION TO 42" DIAMETER, SIMILAR TO "ADAPTER RING" SHEET 35.
2) 60" DIAMETER BASE REQUIRES 24" HIGH CONCENTRIC REDUCER TRANSITION TO 42" DIAMETER, SIMILAR TO "ADAPTER RING" SHEET 35.
3) STANDARD DEPTH = 3'+ PIPE DIAMETER.

PRECAST CONCRETE STORMWATER STRUCTURES	METROPOLITAN ST. LOUIS SEWER DISTRICT *Standard Details of Sewer Construction*		
	Dr. J.L.G. Ch. J.C.K.	2000	SHEET 34

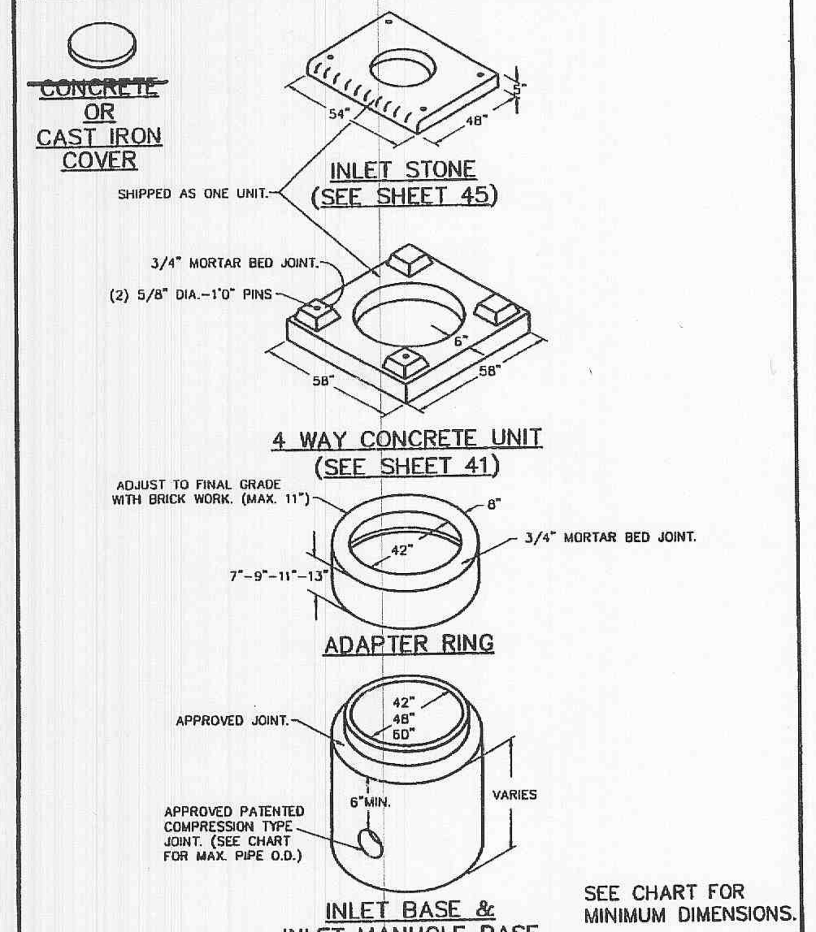

AREA INLET PRECAST CONCRETE	METROPOLITAN ST. LOUIS SEWER DISTRICT *Standard Details of Sewer Construction*		
	Dr. JLG/SAM Ch. J.C.K.	2000	SHEET 35

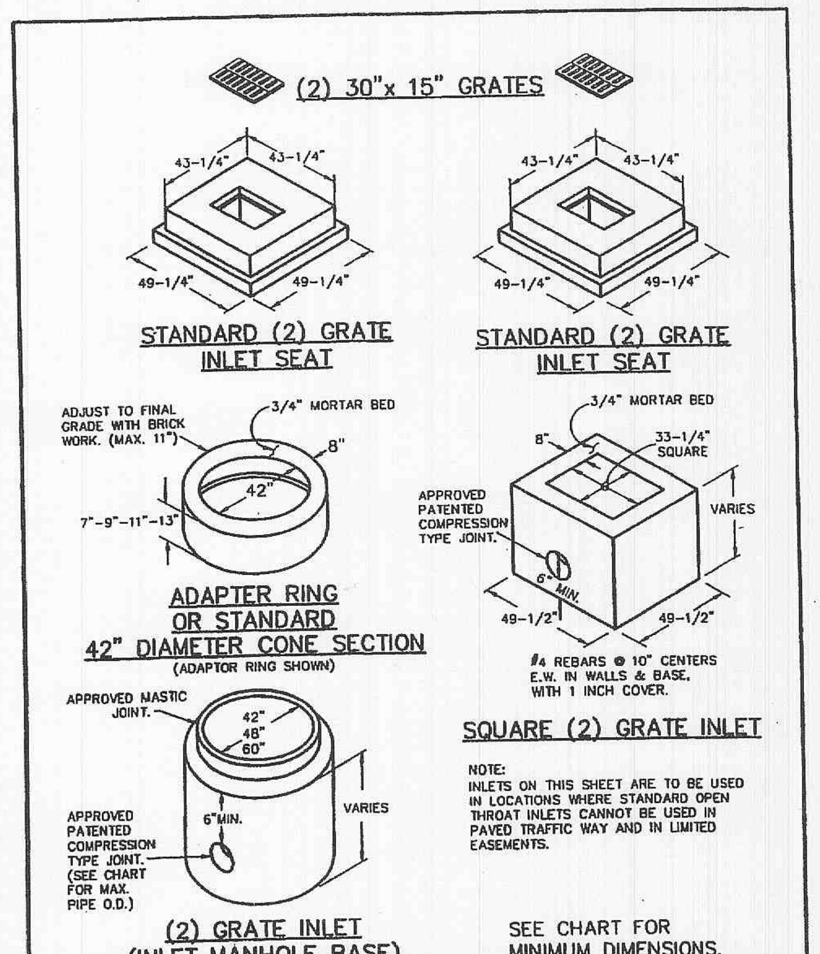

NOTE:
INLETS ON THIS SHEET ARE TO BE USED IN LOCATIONS WHERE STANDARD OPEN THROAT INLETS CANNOT BE USED IN PAVED TRAFFIC WAY AND IN LIMITED EASEMENTS.

SEE CHART FOR MINIMUM DIMENSIONS.

2 GRATE INLETS PRECAST CONCRETE	METROPOLITAN ST. LOUIS SEWER DISTRICT *Standard Details of Sewer Construction*		
	Dr. JLG/SAM Ch. J.C.K.	2000	SHEET 36

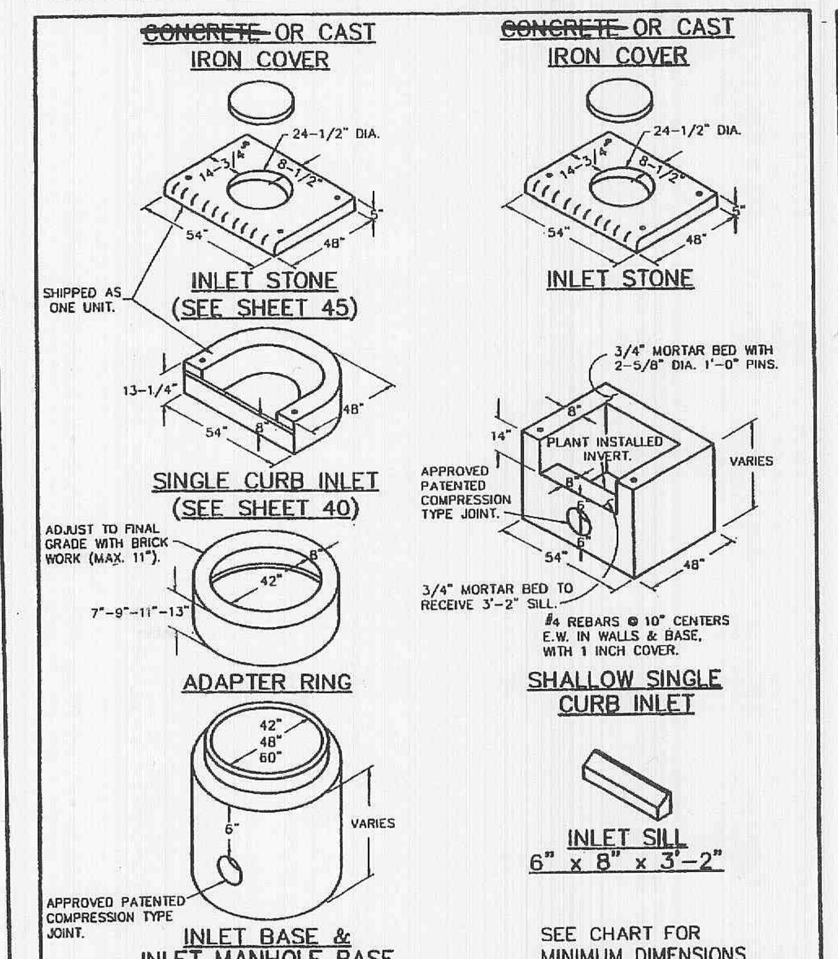

SINGLE STREET INLETS PRECAST CONCRETE	METROPOLITAN ST. LOUIS SEWER DISTRICT *Standard Details of Sewer Construction*		
	Dr. JLG/SAM Ch. J.C.K.	2000	SHEET 37

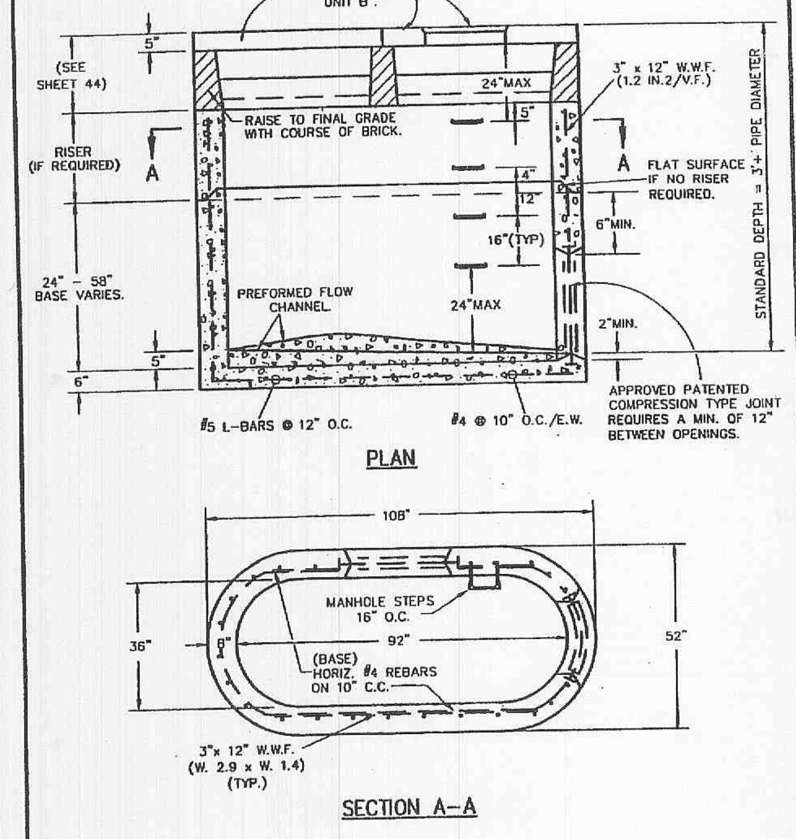

NOTE:
33 INCH R.C.P. MAXIMUM PIPES FRONT & BACK WALLS AND 24 INCH R.C.P. MAXIMUM PIPE FOR ENDS WITH A MINIMUM OF 12 INCHES BETWEEN PIPES.

DOUBLE UNTRAPPED STREET INLET PRECAST CONCRETE	METROPOLITAN ST. LOUIS SEWER DISTRICT *Standard Details of Sewer Construction*		
	Dr. JLG/SAM Ch. J.C.K.	2000	SHEET 38

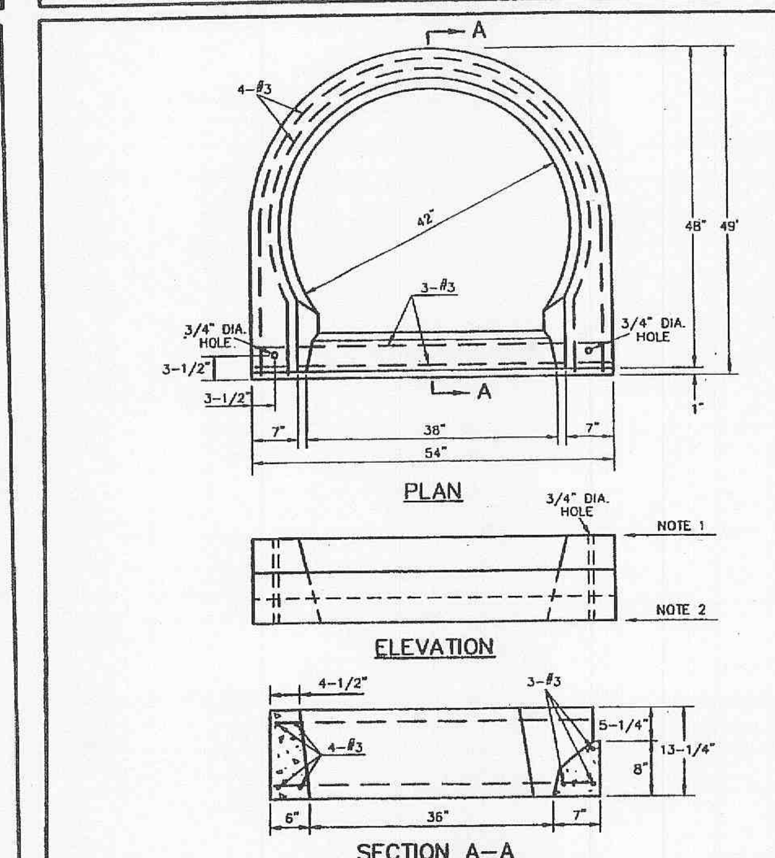

NOTES:
1) SET STANDARD INLET STONE IN 3/4" MORTAR BED AND DOWEL WITH 5/8" DIA. 1'-0" LONG PINS AND GROUT.
2) RAISE TO FINAL GRADE WITH COURSES OF BRICK AND SET THE UNIT TO BASE WITH 3/4" MORTAR BED.
3) THIS UNIT IS TO BE USED WITH 42 INCH I.D. POURED-IN-PLACE CONCRETE OR BRICK BASE.
4) 5000 P.S.I. CONCRETE IS REQUIRED.

PRECAST CONCRETE UNIT FOR SINGLE STREET INLET	METROPOLITAN ST. LOUIS SEWER DISTRICT *Standard Details of Sewer Construction*		
	Dr. WSH/SAM Ch. J.C.K.	2000	SHEET 40

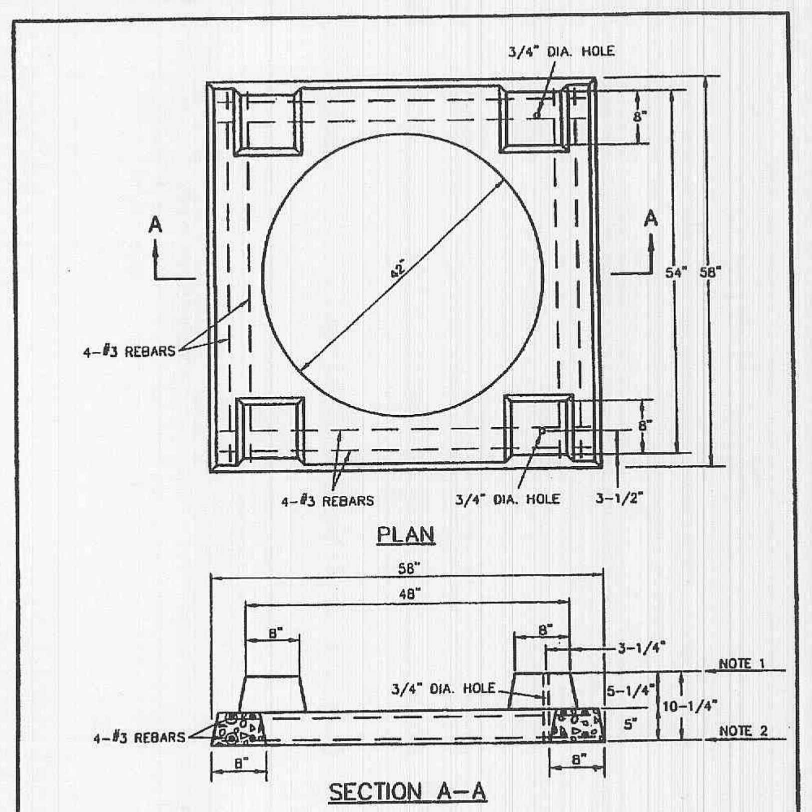

NOTES:
1) SET STANDARD INLET STONE IN 3/4" MORTAR BED AND DOWEL WITH 5/8" DIA. 1'-0" LONG PINS AND GROUT.
2) RAISE TO FINAL GRADE WITH COURSES OF BRICK AND SET THE UNIT TO BASE WITH 3/4" MORTAR BED.
3) THIS UNIT TO BE USED WITH 42 INCH I.D. BASE.
4) 5000 P.S.I. CONCRETE IS REQUIRED.

PRECAST CONCRETE UNIT FOR 4 WAY AREA INLET	METROPOLITAN ST. LOUIS SEWER DISTRICT *Standard Details of Sewer Construction*		
	Dr. DAB/SAM Ch. J.C.K.	2000	SHEET 41

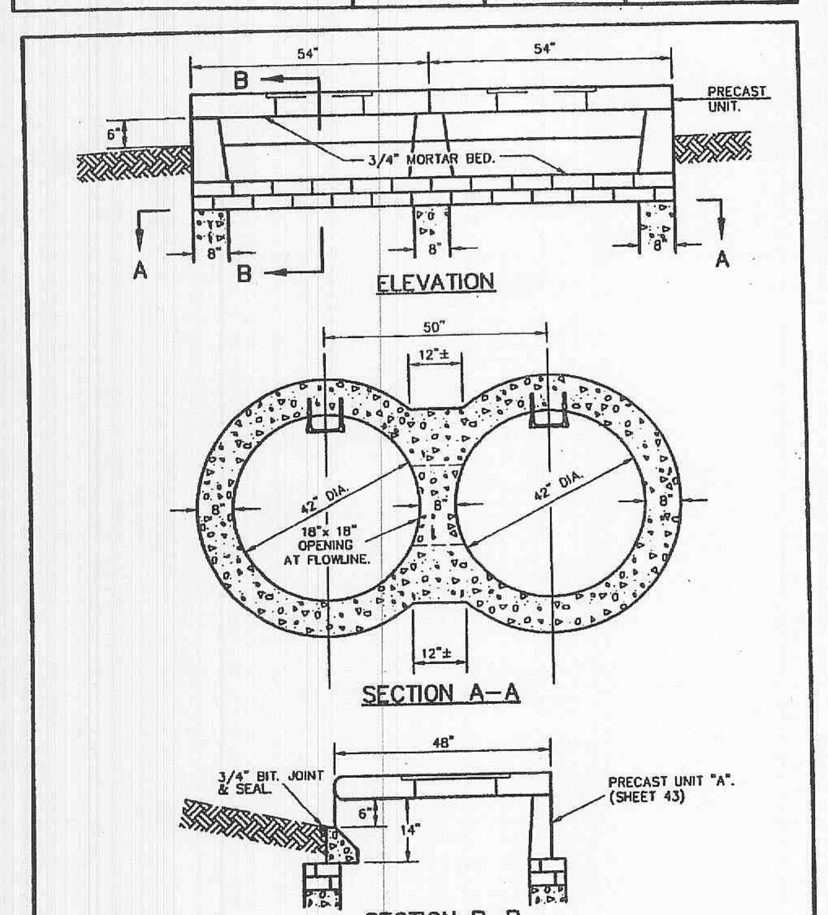

NOTES:
1) STANDARD DEPTH 3'+ PIPE DIAMETER.
2) RAISE TO FINAL GRADE WITH COURSES OF BRICK AND 3/4" MORTAR BED.

CONCRETE DOUBLE STREET INLET WITH PRECAST CONCRETE UNIT "A"	METROPOLITAN ST. LOUIS SEWER DISTRICT *Standard Details of Sewer Construction*		
	Dr. RGW/SAM Ch. J.C.K.	2000	SHEET 42

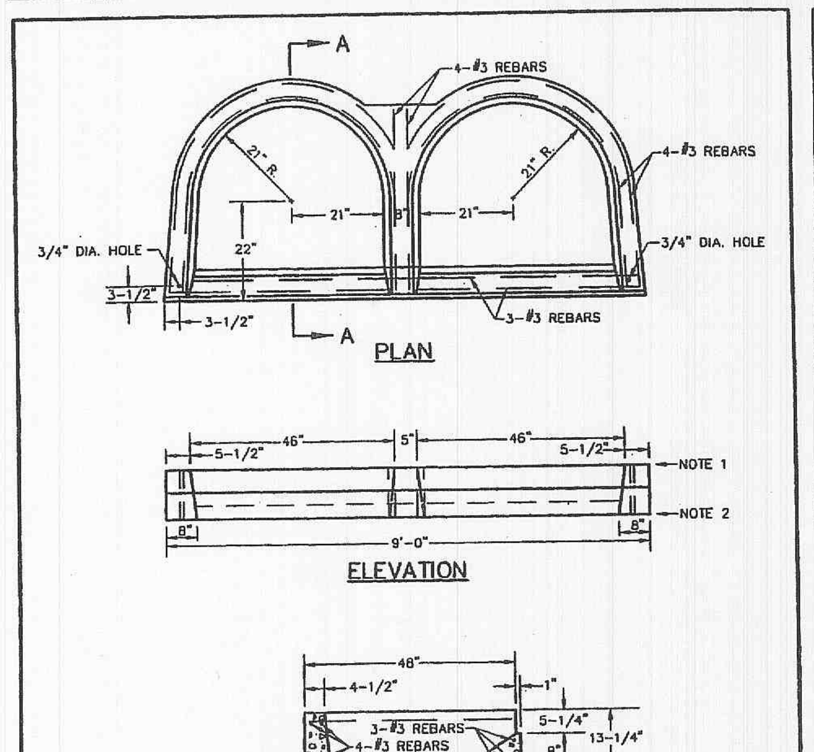

NOTES:
1) SET TWO (2) STANDARD INLET STONES IN 3/4" MORTAR BED AND DOWEL WITH 5/8" DIA. 1'-0" LONG PINS AND GROUT.
2) RAISE TO FINAL GRADE WITH COURSES OF BRICK AND SET THE UNIT TO BASE WITH 3/4" MORTAR BED.
3) THIS UNIT IS TO BE USED WITH POURED-IN-PLACE CONCRETE BASE.
4) 5000 P.S.I. CONCRETE REQUIRED.
5) 1 INCH CLEARANCE, ALL REINFORCEMENT.

PRECAST CONCRETE UNIT "A" FOR STREET DOUBLE INLET	METROPOLITAN ST. LOUIS SEWER DISTRICT *Standard Details of Sewer Construction*		
	Dr. RGW/SAM Ch. J.C.K.	2000	SHEET 43

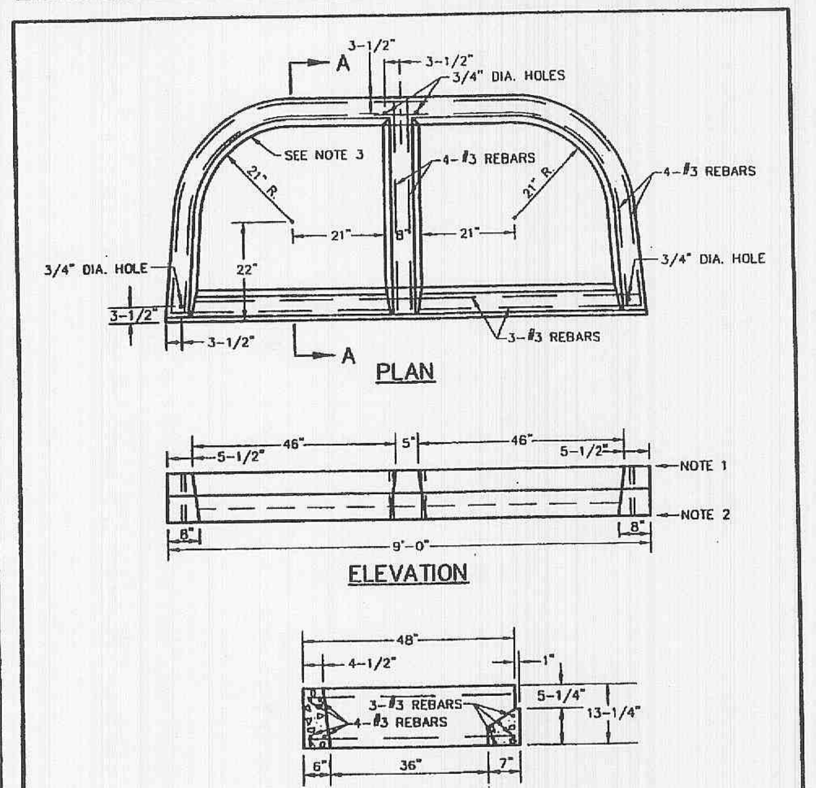

NOTES:
1) SET TWO (2) STANDARD INLET STONES IN 3/4" MORTAR BED AND DOWEL WITH 5/8" DIA. 1'-0" LONG PINS AND GROUT.
2) SET THE UNIT TO BASE WITH 3/4" MORTAR BED.
3) THIS UNIT TO BE USED WITH PRECAST BASE OR BRICK BASE HAVING 8 INCH THICK WALLS AND INSIDE DIMENSIONS CONFORMING TO THE INSIDE DIMENSIONS OF THE UNIT AS INDICATED.
4) 5000 P.S.I. CONCRETE REQUIRED.
5) 1 INCH CLEARANCE, ALL REINFORCEMENT.

PRECAST CONCRETE UNIT "B" FOR STREET DOUBLE INLET	METROPOLITAN ST. LOUIS SEWER DISTRICT *Standard Details of Sewer Construction*		
	Dr. RGW/SAM Ch. J.C.K.	2000	SHEET 44

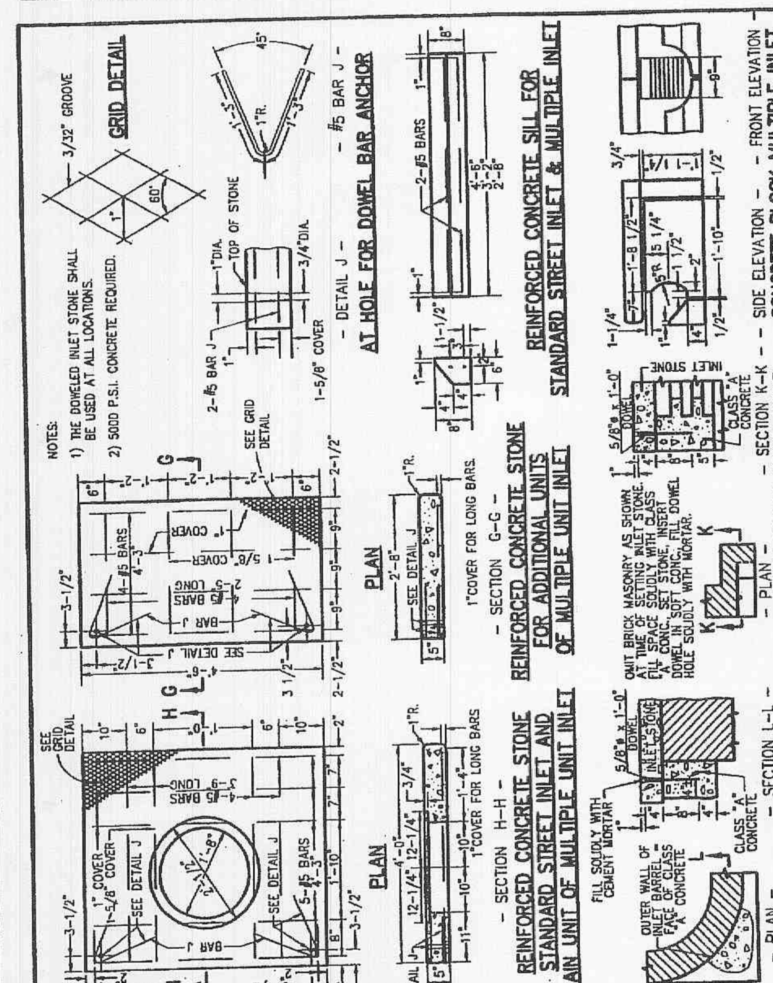

STANDARD - INLET STONES, BLOCKS & DESIGN DETAILS	METROPOLITAN ST. LOUIS SEWER DISTRICT *Standard Details of Sewer Construction*		
	Dr. WSH/SAM Ch. J.C.K.	2000	SHEET 45

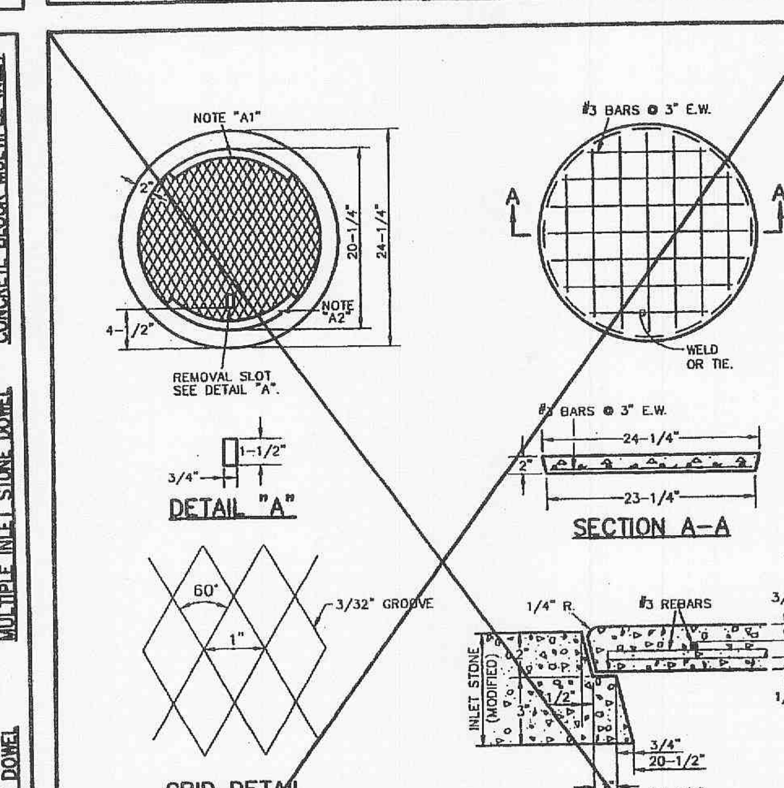

NOTES:
1) PROVIDE 1/8" RAISED LETTERING APPROXIMATELY 3/4" TO 1" HIGH.
A1: METRO ST. LOUIS
A2: SEWER DIST. SEWERS
2) 5000 P.S.I. CONCRETE REQUIRED.
3) #3 REBARS SHALL BE FRP (FIBER REINFORCED POLYMER) MINIMUM GRADE F60 AS DEFINED IN THE ACI COMMITTEE 440 "GUIDE FOR THE DESIGN AND CONSTRUCTION OF CONCRETE REINFORCED WITH FRP BARS" REVISED 17 JANUARY 2000

~~PRECAST CONCRETE INLET COVER~~	METROPOLITAN ST. LOUIS SEWER DISTRICT *Standard Details of Sewer Construction*		
	Dr. RGW/SAM Ch. J.C.K.	2000	SHEET 47

MAGNOLIA
STORM 2 DETAILS

SCES
ST. CHARLES ENGINEERING & SURVEYING, INC.
801 S. FIFTH STREET, SUITE 202
ST. CHARLES, MO 63301
TEL: (636) 947-0607 FAX: (636) 947-2448

ORDER NO.
03-0498
DATE
12/1/03

D-4

H:\DWG\030498\DWG\DETAILS\DETAILS-STORM 2.DWG