Scale: 1" = 50' Horizontal
1" = 10' Vertical

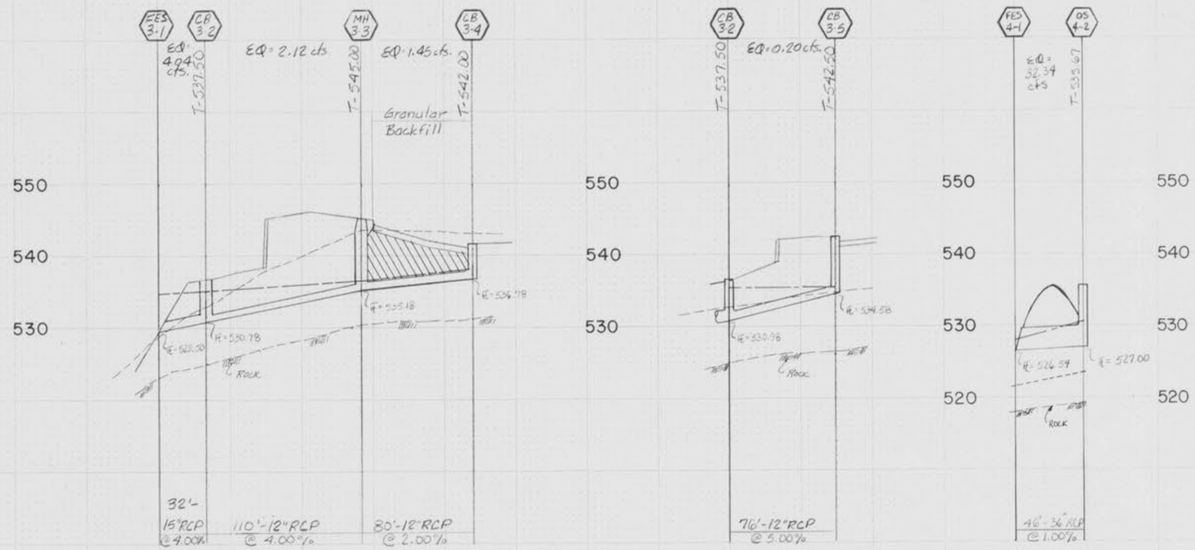

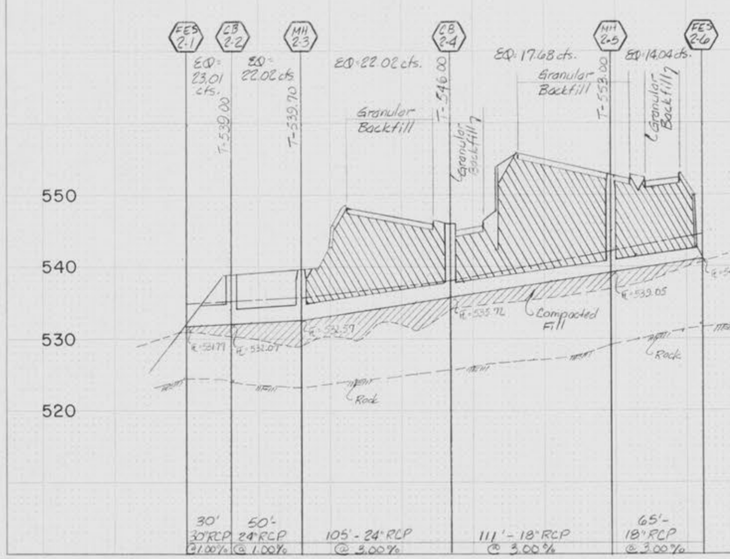

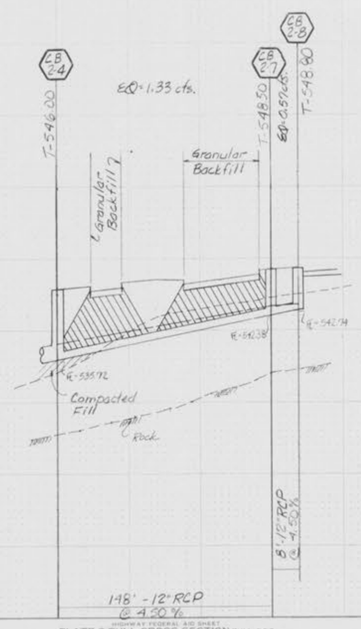

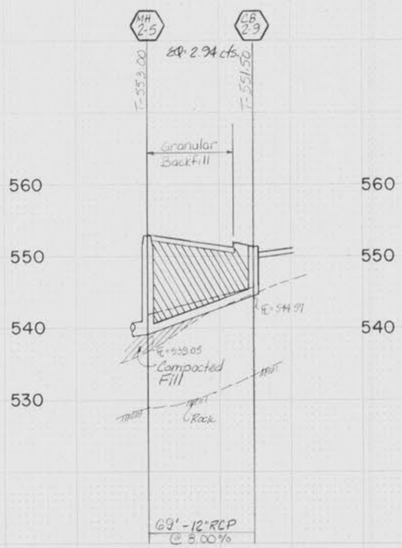

NOTE:

Rock elevations and profiles, as shown on this plan have been compiled from information supplied in the soils report. This information has been interpolated onto this plan for the purpose of informing the contractor of the possibility of rock being encountered. No degree of accuracy can be guaranteed, based on the information provided to us. It shall be the contractors responsibility to inform the engineer if and/or when rock is encountered in the interest of making adjustments where possible to avoid rock excavation.

MALLARD'S LANDING
STORM SEWER PROFILES

FINAL SURVEY — SURVEYED: PLOTTED: TEMPLATE: AREA: AREA CHECKED: NOTE BOOK: NO.: DATE: BY:

ORIGINAL SURVEY — SURVEYED: PLOTTED: TEMPLATE: AREA: AREA CHECKED: NOTE BOOK: NO.: DATE: BY:

PLATE 3-FULL CROSS SECTION-FULL DOT
HIGHWAY FEDERAL AID SHEET
NATIONAL PRINTFAST
PRINTED IN U.S.A.