PANELBOARD: PANEL-'NSHACK' MOUNTED: SURFACE LOCATION: GUARD SHACK 'NORTH'
AMPS: 225A VOLTS: 120/208V PHASE/WIRE: 3ø,4W MAINS: 125A MAIN

LOAD	LOAD, KW LIGHT	RECPT	O/M	OCP A	P	CIRC		CIRC	OCP P	A	LOAD, KW LIGHT	RECPT	O/M	LOAD
INTERIOR LIGHTING & FAN	0.9		0.1	20	1	1	A	2	2	30			4.8	DWH-1
EXTERIOR LIGHTING	0.7			20	1	3	B	4	–	–				
GUARDSHACK COUNTER RECEPTS.		0.8		20	1	5	C	6	3	20			4.0	EWH-1
GUARDSHACK COUNTER RECEPTS.		0.8		20	1	7	A	8	–	–				
GUARDSHACK COUNTER RECEPTS.		0.8		20	1	9	B	10	–	–				
GUARDSHACK COUNTER RECEPTS.		0.8		20	1	11	C	12	1	20			1.6	CU-1
GUARDSHACK EXTERIOR RECEPTS.		0.4		20	1	13	A	14	1	15			0.1	AC-1
GUARDSHACK EXTERIOR RECEPTS.		0.6		20	1	15	B	16	1	20				SPARE
TIRE SHREDDER			0.7	20	1	17	C	18	1	20				SPARE
VEHICLE GATE			0.7	20	1	19	A	20	1	20			0.4	SECURITY CAMERAS (ROOF)
VEHICLE GATE			0.7	20	1	21	B	22	1	20			0.4	SECURITY CAMERAS (SIDES)
TIRE SHREDDER			0.7	20	1	23	C	24	1	20				SPARE
TIRE SHREDDER			0.7	20	1	25	A	26	1	20				SPARE
VEHICLE GATE			0.7	20	1	27	B	28	1	20				SPARE
TIRE SHREDDER			0.7	20	1	29	C	30	1	20				SPARE
VEHICLE GATE			0.7	20	1	31	A	32						SPACE
TIRE SHREDDER			0.7	20	1	33	B	34						SPACE
VEHICLE GATE			0.7	20	1	35	C	36						SPACE
TVSS			0.1	30	3	37	A	38						SPACE
				–	–	39	B	40						SPACE
				–	–	41	C	42						SPACE
SUB-TOTAL, CL, KW	1.6	4.2	7.2								–	–	11.3	SUB-TOTAL, CL, KW
TOTAL, CL, KW	1.6	4.2	18.5											
DEMAND FACTOR	1.0	1.0	0.8											
TOTAL DL, KW	1.6	4.2	14.8	20.6										

TOTAL CONNECTED LOAD 20.6 KW/360 = 57.2A
10,000 A.I.C.

PANELBOARD: PANEL-'WSHACK' MOUNTED: SURFACE LOCATION: GUARD SHACK 'WEST'
AMPS: 100A VOLTS: 120/208V PHASE/WIRE: 3ø,4W MAINS: 100A MAIN

LOAD	LOAD, KW LIGHT	RECPT	O/M	OCP A	P	CIRC		CIRC	OCP P	A	LOAD, KW LIGHT	RECPT	O/M	LOAD
INTERIOR LIGHTING	0.2			20	1	1	A	2	1	20			0.7	TIRE SHREDDER
EXTERIOR LIGHTING	0.2			20	1	3	B	4	1	20			0.7	VEHICLE GATE
GUARDSHACK COUNTER RECEPTS.		0.8		20	1	5	C	6	1	20			0.7	TIRE SHREDDER
GUARDSHACK COUNTER RECEPTS.		0.8		20	1	7	A	8	1	20			0.7	VEHICLE GATE
GUARDSHACK REAR RECEPTS.		0.6		20	1	9	B	10	1	20			0.7	TIRE SHREDDER
GUARDSHACK REAR RECEPTS.		0.6		20	1	11	C	12	1	20			0.7	VEHICLE GATE
GUARDSHACK EXTERIOR RECEPTS.		0.4		20	1	13	A	14	1	20			1.6	CU-1
GUARDSHACK EXTERIOR RECEPTS.		0.4		20	1	15	B	16	1	20			0.1	AC-1
SPARE				20	1	17	C	18	1	20				SPARE
SPARE				20	1	19	A	20	1	20			0.4	SECURITY CAMERAS (ROOF)
CH-1			4.0	30	2	21	B	22	1	20			0.4	SECURITY CAMERAS (SIDES)
------				–	–	23	C	24						SPACE
TVSS			0.1	30	3	25	A	26						SPACE
				–	–	27	B	28						SPACE
				–	–	29	C	30						SPACE
SUB-TOTAL, CL, KW	0.4	3.6	4.1								–	–	6.7	SUB-TOTAL, CL, KW
TOTAL, CL, KW	0.4	3.6	10.8											
DEMAND FACTOR	1.0	1.0	–											
TOTAL DL, KW	0.4	3.6	9.1	13.1										

TOTAL CONNECTED LOAD 13.1 KW/360 = 36A
10,000 A.I.C.

KEYED NOTES

1. SEE ELECTRICAL SYSTEM GROUNDING DIAGRAM BELOW. PROVIDE GROUNDING RODS IN EARTH AS DESCRIBED IN DETAIL.

ELECTRICAL SYMBOLS

- LETTER INDICATES TYPE OF LIGHT FIXTURE
- DUPLEX RECEPTACLE (+18" UNLESS NOTED OTHERWISE)
- DOUBLE DUPLEX RECEPTACLE
- GFI GROUND FAULT RECEPTACLE.
- WP WEATHERPROOF DUPLEX RECEPTACLE (GFI).
- WALL OUTLET FOR TELEPHONE/DATA. (+18" UNLESS NOTED OTHERWISE).
- DISCONNECT SWITCH. F=FUSED, NF=NONFUSED (+48" UNLESS NOTED OTHERWISE.)
- MOTOR
- $ SINGLE POLE SWITCH (+48" UNLESS NOTED OTHERWISE)
- $3 THREE WAY SWITCH
- $M MANUAL STARTER.
- HOME RUN CONDUIT - SHORT STROKES INDICATE PHASE OR SWITCH WIRES, LONG STROKES INDICATE NEUTRAL, LONG STROKES WITH DOT INDICATE GROUND CONDUCTORS.
- CONDUIT CONCEALED IN OR BELOW FLOOR/GRADE.
- J JUNCTION BOX AS NOTED.

LIGHTING FIXTURE SCHEDULE (SEE NOTES 1,2,3 & 4)

TYPE	MANUFACTURER & CATALOG NO.	VOLTAGE	LAMPS	DESCRIPTION
A	LITHONIA #2PM3 G 332	120	3-F032 (T8 OCTRON)	2'x4' RECESSED, 3-LAMP, STATIC, 3-ROWS OF 8, 24 CELL SEMI-SPECULAR LOW IRIDESCENT PARABOLIC, 3" DEEP LOUVERS FLUORESCENT W/ELECTRONIC DIMMABLE LUTRON HI-LUME BALLAST #FDB-4827-120-3 100% TO 1% DIMMING CAPABILITY.
B	LITHONIA #AF-1-321RT-6-AR-120-GEB10	120	PL-T32W/30/4P	6" DIAMETER, OPEN REFLECTOR, HORIZONTAL LAMP, COMPACT FLUORESCENT DOWN LIGHT W/SPECULAR LOW IRIDESCENT FINISH.
C	LITHONIA #TWH-175M-120-PE	120	M175/C/U	WALL MOUNTED AREA LIGHTER, GLASS REFRACTOR. FURNISH W/BUILT-IN BUTTON TYPE PHOTOELECTRIC CELL.
D	GARDCO #BRM820-42-50MH-120-BRP-F-SHD	120	MP50/C/U/MED	8" BOLLARD, 42" TALL BRONZE FINISH WITH FUSING AND 180 DEGREE SHIELD. SHIELD TO BE LOCATED ON GUARD SHACK SIDE. COORDINATE ANCHOR BOLT LOACTION W/FACTORY SUPPLIED TEMPLATE.
E	SPAULDING MIAMI #8-MI-800ma 277V	277	F96T12/HO 800ma	8'-0" FLUORESCENT STRIP W/800ma HIGH OUTPUT LAMP, DAMP LABEL. TO BE USED AS CONTINUOUS ROW MOUNTING. FURNISH W/LOW TEMPERTAURE -20° BALLAST.
F	DAYBRITE #NS-2-32-120-EB	120	2-F032 (T8 OCTRON)	4'-0" FLUORESCENT SIDE MOUNT/ANGLE STRIP, DAMP LABEL. FURNISH W/ELECTRONIC BALLAST 0° BALLAST.
G	KIM #ENTABLATURE (MATCH EXISTING SITE FIXTURES)	277	MP400/C/U	PARKING LOT LIGHT FIXTURE ON 25'-0" POLE (POLE/FIXTURE TO MATCH EXISTING ON SITE). FURNISH W/HIGH POWER FACTOR BALLAST.
H	LITHONIA #TWA-50M-120-LP1-PE	120	LAMP INCLUDED	WALL MOUNTED MINI AREA LIGHTER, POLYCARBONATE REFRACTOR. FURNISH W/BUILT IN BUTTON TYPE PHOTELECTRIC CELL.

LIGHT FIXTURE SCHEDULE NOTES:

1. COLOR TEMPERATURE OF ALL ALL EXTERIOR LIGHTS TO BE 4000°K AND ALL INTERIOR LIGHTS TO BE 3000°K.
2. ELECTRICAL CONTRACTOR IS RESPONSIBLE FOR DETERMINING MOUNTING TYPES OF ALL RECESSED FLUORESCENT LIGHT FIXTURES (LAY-IN, PLASTER, GYP BOARD, ETC.) AND SUBMIT SHOP DRAWINGS ACCORDINGLY.
3. FLUORESCENT LAMPS SPECIFIED ARE BY SYLVANIA. CRI: 75, APPROVED EQUAL BY G.E. AND PHILLIPS ARE ACCEPTABLE.
4. APPROVED EQUAL LIGHT FIXTURES BY THE FOLLOWING MANUFACTURERES ARE ALSO ACCEPTABLE FOR LIGHT FIXTURES SHOWN ON THIS SCHEDULE: COLUMBIA, LIGHTOLIER, KURT VERSEN, HALO, DAYBRITE, GARDCO, WILLIAMS, HALO, LEDALITE, METALUX.

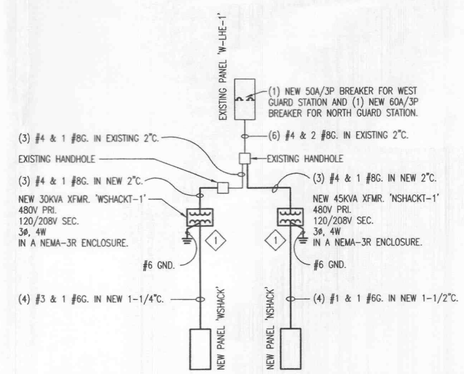

* SEE SITE PLAN FOR ADDITONAL HANDHOLES NOT SHOWN ON ONE-LINE.

ELECTRICAL ONE-LINE:

NO SCALE

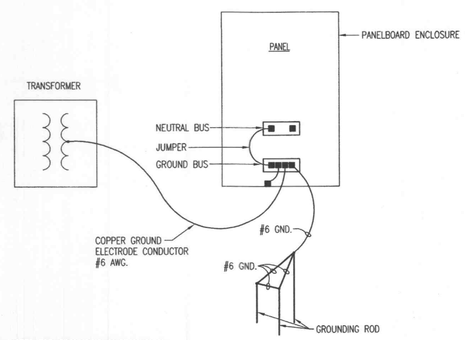

NOTES FOR GROUNDING DIAGRAM ONLY:

1. INSTALL GROUNDING RODS AS MANY AS NECESSARY FOR 25 OHM OR LESS GROUND RESISTANCE. WHERE MORE THAN ONE GROUNDING ROD IS REQUIRED THE SPACE BETWEEN GROUNDING RODS SHALL NOT BE LESS THAN 6 FEET.
2. GROUNDING RODS SHALL BE COPPER OR COPPER CLAD, 10 FEET LONG AND 5/8" DIAMETER MINIMUM. RODS TO BE DRIVEN INTO MOIST EARTH.
3. JUMPER CABLES SHALL BE THE SAME SIZE OF COPPER GROUND ELECTRODE CONDUCTOR.
4. PROVIDE EXOTHERMIC WELD CONNECTIONS AT GROUNDING RODS.

ELECTRICAL SYSTEM GROUNDING DIAGRAM

NO SCALE

MasterCard

MASTERCARD
O' Fallon Missouri

Prepared for
MASTERCARD INTERNATIONAL
12115 Lackland Road
St. Louis, MO 63146
Contact Number:

HELLMUTH, OBATA + KASSABAUM, P.C.

HOK NYC
620 Avenue Of The Americas
New York, New York 10011
T212.741.1200. F212.633.1163.

HOK STL
211 North Broadway, Suite 600
St. Louis, MO 63102 USA
T314.421.2000. F314.421.6073.

All reproduction & intellectual property rights reserved ©2001 HOK

In association with

EDM INCORPORATED
STRUCTURAL, CIVIL, AND MEP ENGINEERS
220 Mansion House Center
St. Louis, MO 63102-1902
T. 314.231.5485 F. 314.231.8167

Issue

#	Date	Description	Drwn	Chk
1			PW	RGH

North

Seal

Key Plan

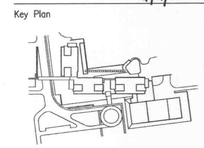

Date 19 DEC. 2001 Project Code 98-0478-001
Drawn Checked
CAD File E3.1.DWG

Scale NONE

Original drawing sheet is 48" x 36"-Scale accordingly if reduced

LIGHT FIXTURE AND PANEL SCHEDULES

Drawing Number E3.1