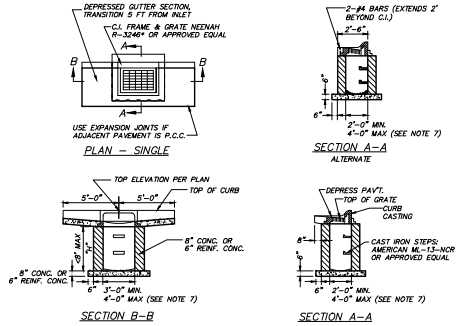

NOTES:
1. CONCRETE SHALL BE 4,000 PSI AT 28 DAYS WITH 6% AIR.
2. INSTALL WEEP HOLES PER SEPARATE DETAIL.
3. REINFORCED CONCRETE SHALL BE #4 BARS AT 12" CTRS, BOTH WAYS AND #4 BARS DIAGONAL AT PIPE OPENINGS FOR BOXES UP TO 4.0' WIDTH AND <8' HEIGHT. SEE SEPARATE DETAIL FOR CONCRETE BOX DESIGN FOR DIMENSIONS THAT EXCEED THESE MAXIMUMS.
4. FORM ALL INVERTS FOR SMOOTH FLOW THRU STRUCTURE WITH NON SHRINK GROUT.
5. STEPS NOT REQUIRED WHERE "H" IS LESS THAN 4' PLACE STEPS ON VACANT WALL WHEN POSSIBLE. STAGGER STEPS 2" FROM CENTERLINE OF FRAME AND GRATE. TOP STEP SHALL BE 24" BELOW GRATE. STEP SPACING SHALL BE 16" TO BOTTOM OF STRUCTURE.
6. SUBSTITUTE NEENAH STANDARD GRATE WITH TYPE L GRATE WHEN INLET IS SET ON GRADE (NOT IN SUMP).
7. FOR STRUCTURES LARGER THAN 3'x2' FOR SINGLE INLETS, OR 6'-2"x2' FOR DOUBLE INLETS, INSTALL REINFORCED CONCRETE TOP WITH 4'x2' OR 6'-2"x2' OPENING.
8. FOR BOXES <4' WIDE AND <8' TALL TOP REINFORCEMENT SHALL BE #4 BARS @ 8" E.W. WITH #4 BARS DIAGONAL AT OPENING. BOXES >4' WIDE AND >8' TALL REINFORCEMENT SHALL BE PER SEPARATE DETAIL.
9. TOP ELEVATION SHOWN ON THE PLAN SHALL BE THE CENTER OF THE CURB RETURN OF THE CASTING.
10. SLOPE THE TOP TO MATCH ADJACENT GRADE, IF NOT LOCATED AT LOW POINT. MAINTAIN WATERTIGHTNESS.
11. A 5/8" TRASH BAR SHALL BE CENTERED WITHIN THE OPENING OF ALL INLETS.

TYPE "A" INLET (CURB INLET)

NOT TO SCALE

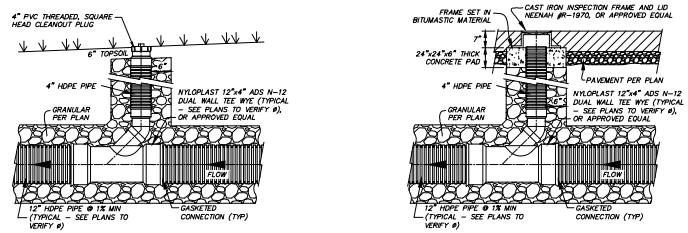

NOTES:
1. SEE PLANS TO DETERMINE IF FITTINGS AND JOINTS ARE SOIL TIGHT (ST) OR WATER TIGHT (WT).
2. INSTALL ALL PIPING PER SEPARATE DETAIL OR MANUFACTURER'S WRITTEN INSTRUCTIONS.
3. THIS DETAIL IS FOR GENERAL LAYOUT PURPOSES ONLY. ADDITIONAL COUPLERS, GASKETS, FITTINGS, ETC. MAY BE NECESSARY PER MANUFACTURER'S REQUIREMENTS.
4. CLEAN OUT PLUG SHALL BE SET FLUSH WITH FINISH GRADE.
5. TWO WAY CLEANOUT CONSTRUCTION SHALL INCLUDE INSTALLATION OF TWO CLEANOUTS AS SHOWN WITHIN 5' OF EACH OTHER, TEE WYE'S INSTALLED IN OPPOSITE DIRECTIONS.
6. SDR35 PVC PIPE MAY BE SUBSTITUTED FOR ANY HDPE PIPE UP TO 15" DIAMETER.

HDPE STORM SEWER CLEANOUT

NOT TO SCALE

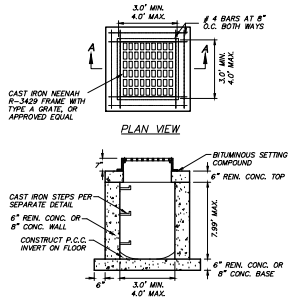

NOTES:
1. CONCRETE SHALL BE 4,000 PSI AT 28 DAYS WITH 6% AIR.
2. REINFORCING STEEL SHALL BE GRADE 60.
3. INSTALL WEEP HOLES IN STRUCTURE PER SEPARATE DETAIL.
4. REINFORCED CONCRETE SHALL BE #4 BARS AT 12" CTRS, BOTH WAYS AND #4 BARS DIAGONAL AT PIPE OPENINGS.
5. FORM ALL INVERTS FOR SMOOTH FLOW THRU STRUCTURE.
6. SEE SEPARATE DETAIL FOR CONCRETE BOX DESIGN FOR DIMENSIONS THAT EXCEED THE MAXIMUMS LISTED HERE.

AREA INLET

NOT TO SCALE

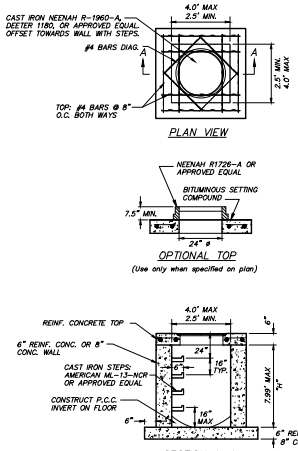

NOTES:
1. CONCRETE SHALL BE 4,000 PSI AT 28 DAYS WITH 6% AIR.
2. REINFORCING STEEL SHALL BE GRADE 60.
3. INSTALL WEEP HOLES PER SEPARATE DETAIL.
4. REINFORCED CONCRETE SHALL BE #4 BARS AT 12" CTRS, BOTH WAYS AND #4 BARS DIAGONAL AT PIPE OPENINGS.
5. FORM ALL INVERTS FOR SMOOTH FLOW THRU STRUCTURE.
6. SEE SEPARATE DETAIL FOR CONCRETE BOX DESIGN FOR DIMENSIONS THAT EXCEED THE MAXIMUMS LISTED HERE.
7. STEPS NOT REQUIRED WHERE "H" IS LESS THAN 4'. PLACE STEPS ON VACANT WALL WHEN POSSIBLE. STAGGER STEPS 2" EACH WAY FROM CENTERLINE OF FRAME AND LID.
8. FRAME AND LID SHALL BE CENTERED ON CENTERLINE OF STEPS.

JUNCTION BOX

NOT TO SCALE

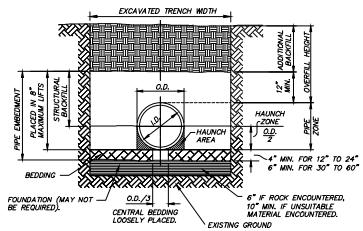

TYPICAL TRENCH DETAIL

BACKFILL NOTES:
1. BEDDING, HAUNCH, AND STRUCTURAL BACKFILL SHALL BE IN CONFORMANCE WITH AASHTO M145 A1 OR A-3 COMPACTED TO A MINIMUM OF 95% OF THE MAXIMUM DRY DENSITY AS DEFINED BY ASTM D698.
2. ALL PIPE INSTALLATION SHALL BE IN ACCORDANCE WITH THE MANUFACTURER'S RECOMMENDATIONS AND ASTM D2321 LATEST ADDITION.
3. HAUNCH, STRUCTURAL, AND ADDITIONAL BACKFILL SHALL BE PLACED IN LIFTS NOT TO EXCEED 8 INCHES AND COMPACTED TO 95% OF THE MAXIMUM DRY DENSITY AS DEFINED BY ASTM D698.

TABLE I
CORRUGATED HDPE AND POLYVINYL CHLORIDE CIRCULAR PIPE

SPECIFIED DIA OF PIPE (IN.)	MIN OVERFILL HEIGHT (FT)	HDPE MAX OVERFILL HEIGHT* (FT)	POLYVINYL CHLORIDE MAX OVERFILL HEIGHT* (FT)		ADS N-12, N-12 ST, AND N-12 WT PIPE						TRENCH WIDTH (IN.)
					VIRGIN RESIN (AASHTO M294) OVERFILL HEIGHT* (FT)			ENGINEERED COMPOUND (RECYCLED, ASTM F2648) OVERFILL HEIGHT* (FT)			
			SDR 35#	SDR 26#	CLASS 1**	CLASS 2**	CLASS 3**	CLASS 1**	CLASS 2**	CLASS 3**	
12	2	26	15	30	43	29	21	27	19	12	34
15	2	28	15	30	45	30	22	27	20	13	39
18	2	24	15	30	40	27	19	25	18	11	44
24	2	20	15	30	36	25	17	22	16	12	55
30	2.5	17	N/A	N/A	29	21	15	16	12	6	67
36	2.5	19	N/A	N/A	34	23	16	21	15	10	76
42	2.5	19	N/A	N/A	31	23	16	17	13	7	84
48	2.5	17	N/A	N/A	30	20	14	18	13	10	95
54	2.5	9	N/A	N/A	33	22	15	N/A	N/A	N/A	104
60	2.5	9	N/A	N/A	33	22	15	20	15	10	113

TABLE ASSUMES STANDARD PROCTOR DENSITY OF 95%
* MAXIMUM OVERFILL MEASURED FROM THE TOP OF PIPE TO SURFACE.
** CLASS 1 – CRUSHED ROCK, ANGULAR; AASHTO M43 – 5, 6, 56, 57, 67
** CLASS 2 – CLEAN, COURSE GRAINED SOILS TO BORDERLINE CLEAN FINES; AASHTO M43 – 5, 6, 56, 57, 67; AASHTO M145 – A1, A3
** CLASS 3 – COURSE GRAINED SOILS WITH FINES AND INORGANIC FINE-GRAINED SOILS; AASHTO M43 – GRAVEL AND SAND WITH <10% FINES; AASHTO M145 – A-2-4, A-2-5, A-2-6, A-4, OR A-6 WITH >30% RETAINED ON #200 SIEVE
** REFER TO CURRENT ADS INC. DRAINAGE HANDBOOK FOR A COMPLETE LISTING OF SUITABLE MATERIALS
# PER ASTM D-3034 FOR PIPE UP TO 15" AND ASTM F679 OVER 15"

EMBEDMENT OF PLASTIC STORM SEWER PIPE

NOT TO SCALE

TABLE II
MINIMUM COVER FOR CONSTRUCTION LOADS

PIPE DIA. (IN.)	MINIMUM COVER (FT) FOR INDICATED AXLE LOADS (THOUSANDS OF POUNDS)			
	18–50	50–75	75–110	110–150
12–36	2.0	2.5	3.0	3.0
42–48	3.0	3.0	3.5	4.0

THE CONTRACTOR SHALL PROVIDE MINIMUM COVER PLUS ANY ADDITIONAL COVER REQUIRED TO AVOID DAMAGE TO THE PIPE. IN UNPAVED SITUATIONS, THE SURFACE MUST BE MAINTAINED TO A LEVEL AND NON-RUTTED CONDITION.

LEGEND
I.D. = NORMAL INSIDE DIAMETER OF PIPE.
O.D. = OUTSIDE DIAMETER OF PIPE.
H = FILL COVER HEIGHT OVER PIPE (FEET).
MIN. = MINIMUM
MAX = MAXIMUM
= UNDISTURBED SOIL

CONSTRUCTION SEQUENCE:
1. PLACE BEDDING MATERIAL TO GRADE.
2. COMPACT BEDDING OUTSIDE THE MIDDLE THIRD OF THE PIPE.
3. INSTALL PIPE TO GRADE.
4. PLACE AND COMPACT THE HAUNCH AREA UP TO THE SPRINGLINE.
5. COMPLETE BACKFILL ACCORDING TO SPECIFICATIONS.

TABLE III
PARALLEL PIPE INSTALLATION

PIPE SIZE	S (IN.)	X (IN.)
12	12	9
15	12	9
18	12	9
24	12	10
30	15	16
36	18	18
42	21	18
48	24	18

S = MINIMUM PIPE SEPARATION (IN) BETWEEN OUTSIDE WALLS OF PIPES.
X = MINIMUM SEPARATION BETWEEN TRENCH WALL AND OUTSIDE WALL OF PIPE.

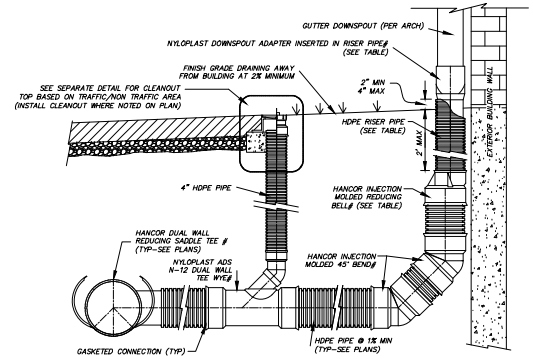

GUTTER DOWNSPOUT (INCHES)	DOWNSPOUT ADAPTER (INCHES)	NYLOPLAST DOWNSPOUT ADAPTER ID	RISER PIPE # (INCHES)
4 X 4	4 X 4 X 4	TECHNICAL DWG NO. 0444FH	4
4 X 6	4 X 6 X 6	TECHNICAL DWG NO. 0466FH	6
6 X 6	6 X 6 X 6	TECHNICAL DWG NO. 0666FH	6
6 X 8	6 X 6 X 8	TECHNICAL DWG NO. 0668FH	8*
8 X 8	8 X 8 X 8	TECHNICAL DWG NO. 0888FH	8*

* INJECTION MOLDED REDUCING BELL NOT NECESSARY
# OR APPROVED EQUAL

NOTES:
1. SEE PLANS TO DETERMINE IF FITTINGS AND JOINTS ARE SOIL TIGHT (ST) OR WATER TIGHT (WT).
2. INSTALL ALL PIPING PER SEPARATE DETAIL OR MANUFACTURER'S WRITTEN INSTRUCTIONS.
3. THIS DETAIL IS FOR GENERAL LAYOUT PURPOSES ONLY. ADDITIONAL COUPLERS, GASKETS, FITTINGS, ETC. MAY BE NECESSARY PER MANUFACTURER'S REQUIREMENTS.
4. IF GUTTER DOWNSPOUT SIZE EXCEEDS THE LARGEST AVAILABLE HANCOR DOWNSPOUT ADAPTER, THE HDPE PIPE SIZE SHALL BE INCREASED TO ACCOMMODATE THE DOWNSPOUT AND THE DOWNSPOUT ADAPTER SHALL BE REPLACED WITH AN HDPE END CAP PREFABRICATED OR CUT TO FIT THE DOWNSPOUT GUTTER AND UPSIZED HDPE PIPE. CAP/PIPE SHALL BE INSTALLED 30 CAP IS 2" ABOVE FINISHED GRADE, MINIMUM.
5. SDR35 PVC PIPE MAY BE SUBSTITUTED FOR ANY HDPE PIPE AND/OR FITTING UP TO 15" IN DIAMETER.

GUTTER DOWNSPOUT CONNECTION

NOT TO SCALE

PLANNING & ZONING #20–002498 APPROVED MAY 7, 2020

ENGINEERING SURVEYS AND SERVICES
EST. 1954
Engineering Surveys & Services
Consulting Engineers • Land Surveyors • Environmental Professionals
Analytical and Material Laboratories
1113 Fay Street, Columbia, Missouri 65201
573-449-2646 | www.essinc.com
Other Offices:
Jefferson City - Sedalia - Wildwood
Missouri Engineering Corporation # 2004000318

MEADOWOOD ESTATES - PHASE I
LOT 1 - MEADOWOOD ESTATES SUBDIVISION
O'FALLON, ST. CHARLES COUNTY, MISSOURI

7/24/2020
STATE OF MISSOURI
MATTHEW AARON KRIETE
NUMBER PE-2007002811
PROFESSIONAL ENGINEER

MATTHEW A. KRIETE
PROFESSIONAL ENGINEER
PE-2007002811

IF ORIGINAL SIGNATURE OR DIGITAL AUTHENTICATION IS NOT PRESENT THIS MEDIA SHOULD NOT BE CONSIDERED A CERTIFIED DOCUMENT.

Date
MAY 22, 2020

Revised	
1	JULY 14, 2020
	CITY COMMENTS

Design: KAH Drawn: MJS

STORM SEWER DETAILS

Sheet
C11.01

ES&S PROJECT NO. 14480

J:\CURRENT DRAWINGS\C3D\TO-FILE\01-14480 COVER & DETAILS.DWG 7/24/2020