PIPE DIA.	MIN. TRENCH WIDTH
≤ 6"	PIPE DIA. + 18"
8"–10"	PIPE DIA. + 10"
12"–36"	PIPE DIA. + 12"

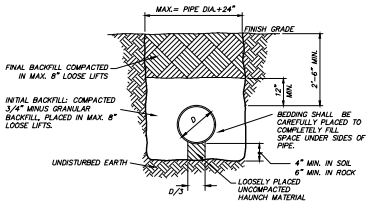

EMBEDMENT OF PVC SANITARY SEWER PIPE

NOT TO SCALE

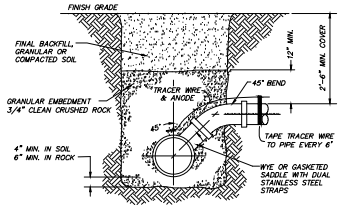

STANDARD SERVICE CONNECTION

NOT TO SCALE

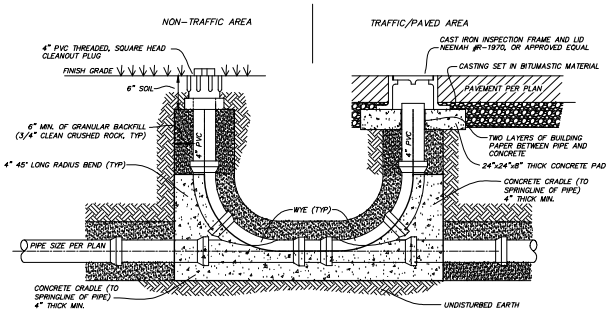

NOTES:
1. ALL PIPE & FITTINGS SHALL BE WATER TIGHT, GASKETED, SDR35 PVC.
2. INSTALL ALL PIPING PER SEPARATE DETAIL OR MANUFACTURER'S WRITTEN INSTRUCTIONS.
3. THIS DETAIL IS FOR GENERAL LAYOUT PURPOSES ONLY. ADDITIONAL COUPLERS, GASKETS, FITTINGS, ETC. MAY BE NECESSARY PER MANUFACTURER'S REQUIREMENTS
4. TOP SHALL BE SET FLUSH WITH FINISH GRADE.
5. INSTALL IN THE DIRECTION OF FLOW AS SHOWN UNLESS OTHERWISE INDICATED IN PLANS.

TWO WAY SANITARY CLEANOUT

NOT TO SCALE

NOTE: THIS DETAIL IS FROM PWSD#2

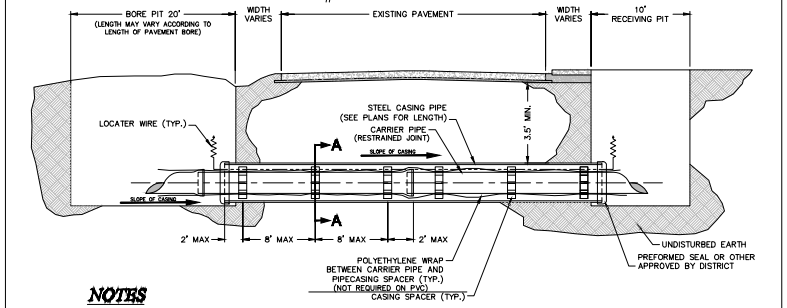

PLAN VIEW

NOT TO SCALE

NOTES

A. INSTALLATION OF THE CASING AND CARRIER PIPES SHALL MEET THE REQUIREMENTS OF PUBLIC WATER SUPPLY DISTRICT No. 2 OF ST. CHARLES COUNTY.

B. CASING PIPES FOR ROAD AND HIGHWAY CROSSINGS SHALL BE WELDED STEEL PIPE WITH A MINIMUM WALL THICKNESS OF ¼" NON-COATED AND SHALL HAVE A MINIMUM DIAMETER OF 10" LARGER THAN THE NOMINAL SIZE OF THE CARRIER PIPE.

C. THE CARRIER PIPE SHALL BE RESTRAINED JOINT PIPE

FOR SANITARY SEWER BORES, SEE THE MSD DETAIL

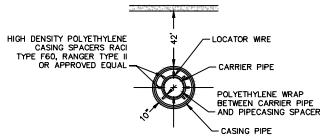

SECTION A–A

NOT TO SCALE

TYPICAL WATER BORE AND ENCASEMENT

DETAIL "H"

NOTE: WATER BORE DETAIL SUFFICIENT FOR SANITARY SEWER BORE PER CITY OF O'FALLON

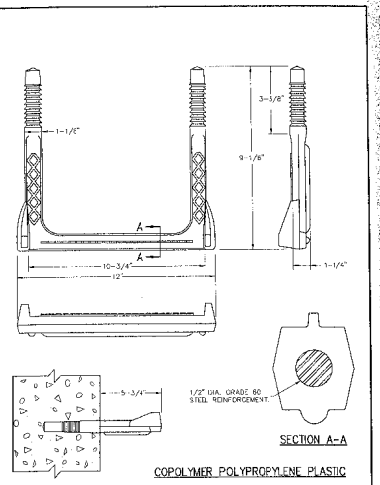

MANHOLE STEP FOR PRECAST & CAST-IN-PLACE MANHOLE	METROPOLITAN ST. LOUIS SEWER DISTRICT *Standard Details of Sewer Construction*		
	Dr. D.A.B. Ck. J.C.K.	2000	SHEET 58

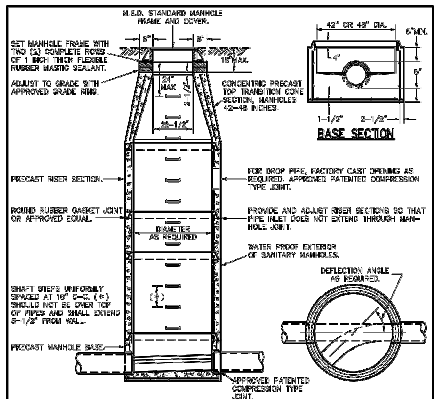

NOTES:

1) THE MINIMUM INSIDE DIAMETER FOR THE BASE AND RISER SECTIONS SHALL BE 48 INCHES FOR 5 INCH DIAMETER SANITARY SEWERS AND ALL STORM SEWERS. THE MINIMUM INSIDE DIAMETER FOR SANITARY SEWERS LARGER THAN 6 INCH DIAMETER IS 48 INCHES. MANHOLE SHALL MEET ASTM D-478 REQUIREMENTS.
2) FLOWLINE ELEVATION OF INCOMING PIPES SHALL BE 1 INCH HIGHER THAN THAT OF OUTGOING PIPE.
3) PIPE SIZES LARGER THAN 24 INCH DIAMETER MAY REQUIRE MANHOLE DIAMETERS OF 60 INCH, 72 INCH OR 96 INCH AS DETERMINED BY OUTSIDE DIAMETERS AND ORIENTATIONS OF CONNECTING PIPES.
4) ECCENTRIC CONES SHALL BE USED ON DIAMETERS 60 INCH AND LARGER. STEPS SHALL EXTEND DOWN VERTICAL WALL OF CONE.
5) PRIOR TO FABRICATION, SHOP DRAWINGS SHALL BE SUBMITTED TO THE DISTRICT FOR APPROVAL OF MANHOLES ON PIPE DIAMETERS LARGER THAN 24 INCH AND ALSO FOR THOSE STRUCTURES WITH A DROP PIPE CONNECTION.

PRECAST CONCRETE MANHOLE	METROPOLITAN ST. LOUIS SEWER DISTRICT *Standard Details of Sewer Construction*		
	Dr. WSH/SAM Ck. J.C.K.	2009	SHEET 21 (REV)

PLANNING & ZONING #20-002498 APPROVED MAY 7, 2020

Engineering Surveys & Services
Consulting Engineers, Land Surveyors, Environmental Professionals, Analytical and Material Laboratories
1113 Fay Street, Columbia, Missouri 65201
573-449-2646 | www.essinc.com
Other Offices:
Jefferson City - Sedalia - Wildwood
Missouri Engineering Corporation # 2004000193

MEADOWOOD ESTATES - PHASE I

LOT 1 - MEADOWOOD ESTATES SUBDIVISION

O'FALLON, ST. CHARLES COUNTY, MISSOURI

7/24/2020

STATE OF MISSOURI
MATTHEW AARON KRETE
NUMBER PE-2007002811
PROFESSIONAL ENGINEER

MATTHEW A. KRETE
PROFESSIONAL ENGINEER
PE-2007002811

IF ORIGINAL SIGNATURE OR DIGITAL AUTHENTICATION IS NOT PRESENT THIS MEDIA SHOULD NOT BE CONSIDERED A CERTIFIED DOCUMENT.

Date

MAY 22, 2020

Revised

1 JULY 14, 2020 CITY COMMENTS

Design: KAH Drawn: MJS

SANITARY SEWER DETAILS

Sheet

C12.01

ES&S PROJECT NO. 14480