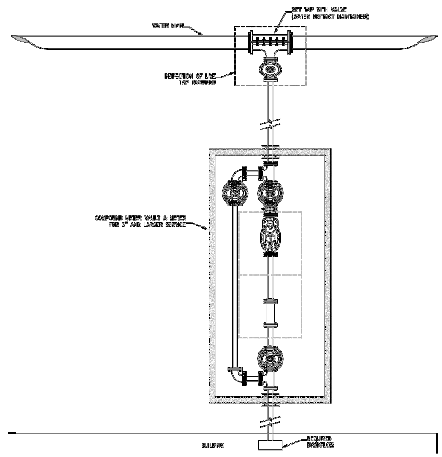

PLAN VIEW
1.5" TO SCALE

TYPICAL COMMERCIAL SERVICE CONNECTION
WITHOUT FIRE PROTECTION
DETAIL "I"

PUBLIC WATER SUPPLY DISTRICT #2
OF SAINT CHARLES COUNTY

APRIL 20, 2005
EW SCALE: 1"=20'

22

NOTE: THIS DETAIL IS FROM PWSD#2

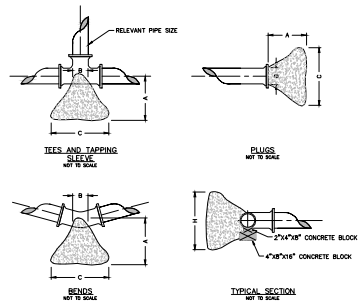

THRUST BLOCK DIMENSIONS - INCHES

PIPE DIA.	ALL FTGS.		TEE PLUG TAPPING		90 DEGREE BEND		45 DEGREE BEND		22-1/2 BEND		11-1/4 BEND	
	A	B	C	H	C	H	C	H	C	H	C	H
4	14	4	24	12	26	15	18	12	12	12	12	12
6	18	6	36	18	36	24	30	18	24	12	12	12
8	20	8	36	30	42	36	36	24	24	18	18	12
10	20	10	48	36	66	36	36	36	28	24	18	18
12	24	12	68	36	82	42	52	36	40	24	28	18

NOTE

FOR FITTINGS LARGER THAN 12", SPECIAL RESTRAINT DESIGNS ARE REQUIRED.

HORIZONTAL THRUST BLOCKING
DETAIL "G"

NOTE: THIS DETAIL IS FROM PWSD#2

Buffalo box is an acceptable product to use.
Tyler 562-S and 564-S are acceptable products.

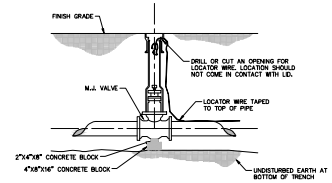

GATE VALVE DETAIL
NOT TO SCALE
DETAIL "F"

NOTE: THIS DETAIL IS FROM PWSD#2

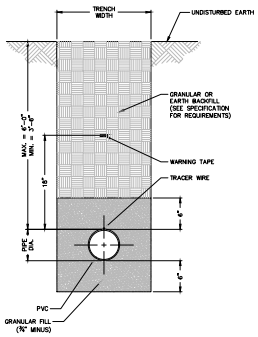

NOTES

1) SEE SPECIFICATIONS FOR ADDITIONAL DETAILS FOR BEDDING AND BACKFILL.

TYPICAL TRENCH SECTION
FOR PVC PIPE
NOT TO SCALE
DETAIL "A"
PAGE 1 OF 2

NOTE: THIS DETAIL IS FROM PWSD#2

NOTES

6" PIPES BETWEEN VALVE AND FIRE HYDRANT SHALL BE D.J. "ANCHOR LOKS" OR DUCTILE IRON PIPE WITH "MEGALUG" RESTRAINER FOLLOWER GLANDS ON ALL M.J. JOINTS.

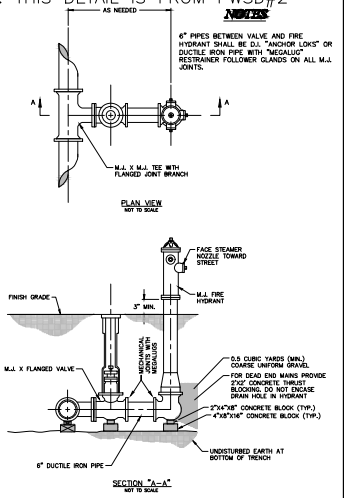

FIRE HYDRANT DETAIL
DETAIL "F"
PAGE 1 OF 3

NOTE: THIS DETAIL IS FROM PWSD#2

NOTES

6" PIPES BETWEEN TEE AND VALVE AND BETWEEN VALVE AND FIRE HYDRANT SHALL BE D.J. "ANCHOR LOKS" OR DUCTILE IRON PIPE WITH "MEGALUG" RESTRAINER FOLLOWER GLANDS ON ALL M.J. JOINTS.

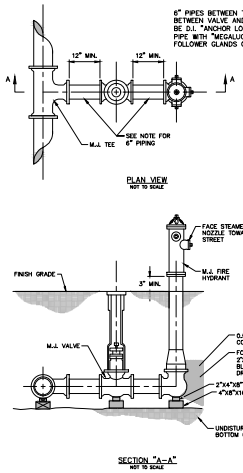

FIRE HYDRANT DETAIL
DETAIL "F"
PAGE 2 OF 3

NOTE: MODIFIED DETAIL FROM PWSD#2

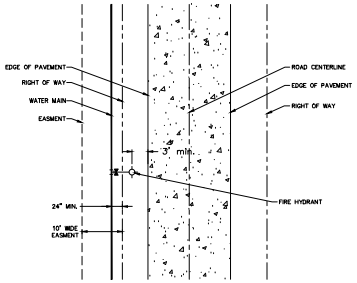

FIRE HYDRANT LOCATION
NOT TO SCALE

FIRE HYDRANT DETAIL
DETAIL "F"
PAGE 3 OF 3

TYPICAL 3" OR LARGER
SERVICE METER BOX AND FIRE
PROTECTION BYPASS IN "GREEN SPACE"
EXISTING EXAMPLE PHOTO
DETAIL "L"
NOT TO SCALE

PUBLIC WATER SUPPLY DISTRICT #2
OF SAINT CHARLES COUNTY

APRIL 20, 2005
EW SCALE: 1"=20'

23

PLANNING & ZONING #20-002498 APPROVED MAY 7, 2020

Engineering Surveys & Services
Consulting Engineers, Land Surveyors, Environmental Professionals
Analytical and Material Laboratories
1113 Fay Street, Columbia, Missouri 65201
573-449-2646 | www.essinc.com
Other Offices:
Jefferson City - Sedalia - Wildwood
Missouri Engineering Corporation # 2004005018

MEADOWOOD ESTATES - PHASE I

LOT 1 - MEADOWOOD ESTATES SUBDIVISION
O'FALLON, ST. CHARLES COUNTY, MISSOURI

7/14/2020
STATE OF MISSOURI
MATTHEW AARON KRETE
NUMBER PE-2007002811
PROFESSIONAL ENGINEER

MATTHEW A. KRETE
PROFESSIONAL ENGINEER
PE-2007002811

"If ORIGINAL SIGNATURE OR DIGITAL AUTHENTICATION IS NOT PRESENT THIS MEDIA SHOULD NOT BE CONSIDERED A CERTIFIED DOCUMENT."

Date
MAY 22, 2020

Revised
1 JULY 14, 2020
CITY COMMENTS

Design: KAH Drawn: MJS

WATER DETAILS

Sheet
C13.01

ES&S PROJECT NO. 14480

J:\CURRENT DRAWINGS\C13\14480 FAIRE CONCEP & DETAILS.DWG 7/14/2020