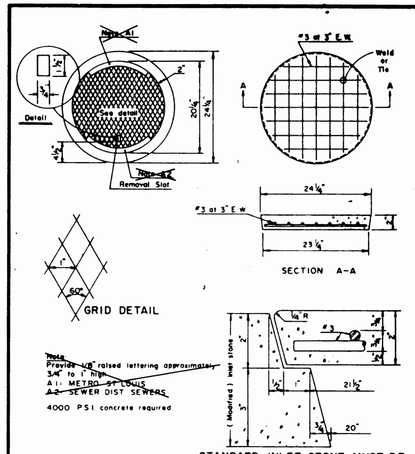

PRE-CAST CONCRETE INLET COVER

DETAIL 37

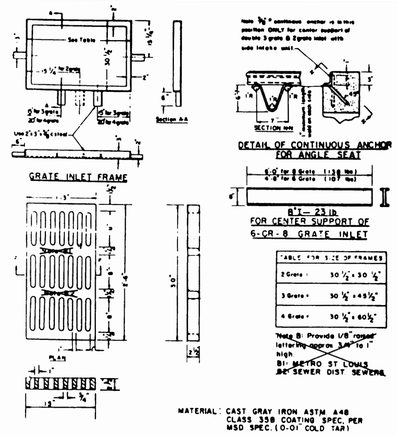

DETAILS OF INLET FRAME AND GRATES

DETAIL 38

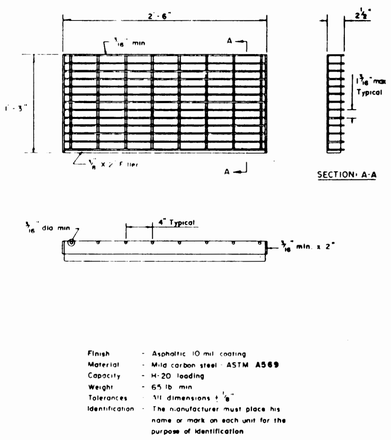

DETAIL OF STEEL GRATE (ALTERNATE TO CAST IRON "C" GRATE)

DETAIL 39

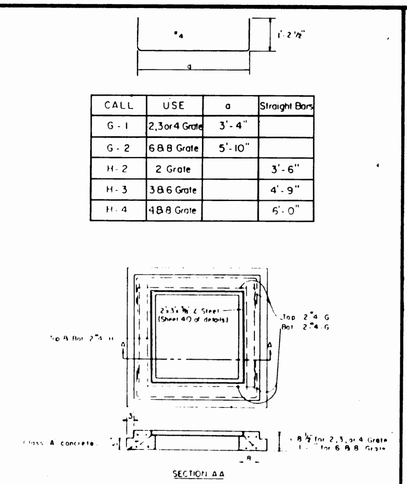

CALL	USE	a	Straight Bars
G-1	2,3 or 4 Grate	3'-4"	
G-2	6 & 8 Grate	5'-10"	
H-2	2 Grate		3'-6"
H-3	3 & 6 Grate		4'-9"
H-4	4 & 8 Grate		6'-0"

STEEL REQUIREMENTS FOR GRATE INLET SEAT

DETAIL 40

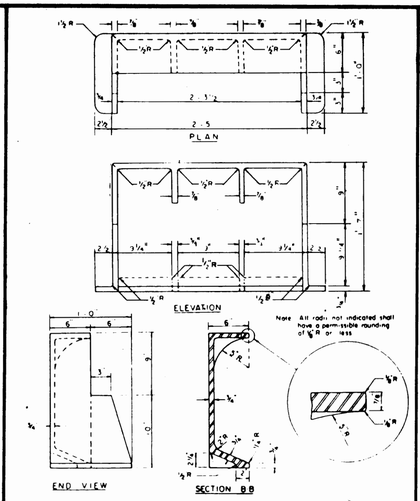

CAST IRON SIDE INTAKE UNIT FOR GRATED INLETS 249 LBS

DETAIL 41

DETAIL 42

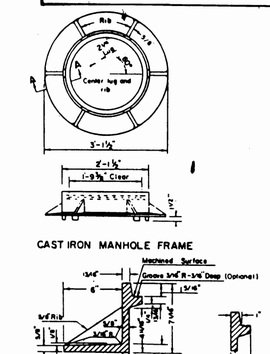

CAST IRON MANHOLE FRAME

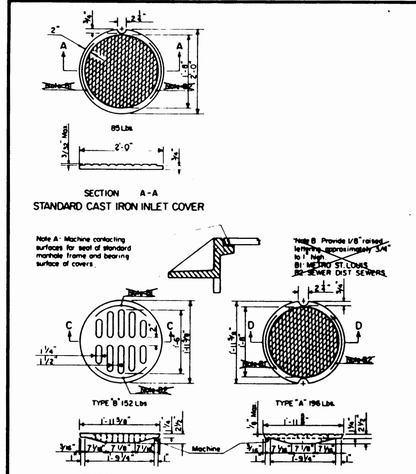

CAST IRON COVERS
MANHOLES AND INLETS

DETAIL 43

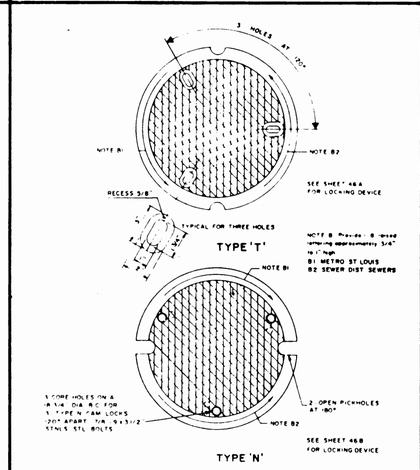

CAST IRON MANHOLE COVERS (LOCK TYPE)

DETAIL 44

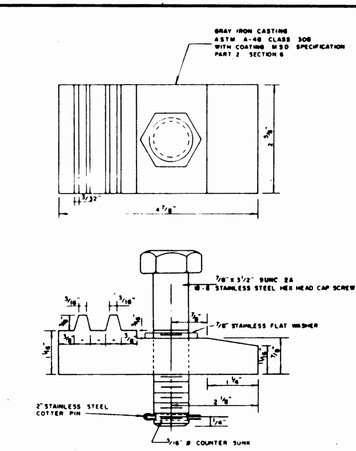

LOCKING DEVICE FOR TYPE "T" LOCK TYPE MANHOLE COVER

DETAIL 45

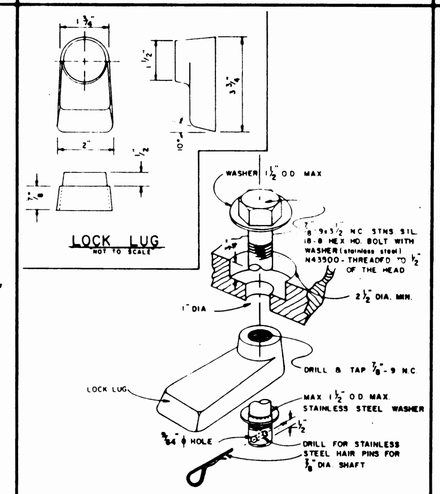

LOCKING DEVICE FOR TYPE "N" LOCK TYPE MANHOLE COVER

DETAIL 46

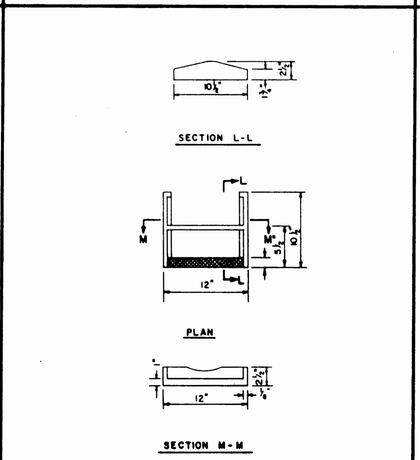

CAST IRON MANHOLE STEPS

DETAIL 47

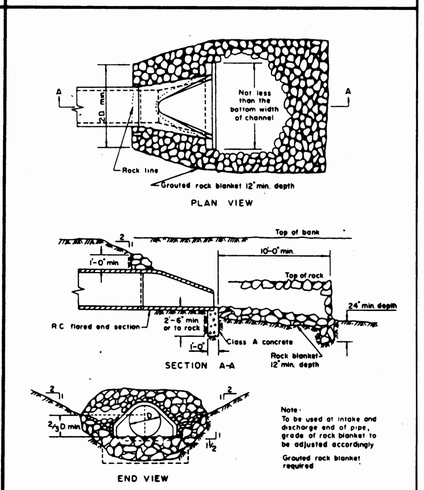

FLARED END SECTION

DETAIL 48

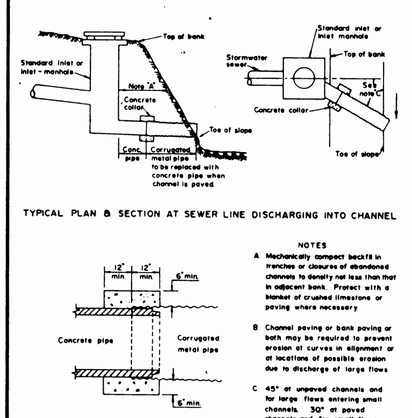

NOTES

A Mechanically compact backfill in trenches or closures of abandoned channels to density not less than that in adjacent bank. Protect with a blanket of crushed limestone or paving where necessary.

B Channel paving or bank paving or both may be required to prevent erosion at curves in alignment or at locations of possible erosion due to discharge of large flows.

C 45° at unpaved channels and for large flows entering small channels. 30° at paved channels and for small flows entering large channels.

STORMWATER CHANNELS

DETAIL 49

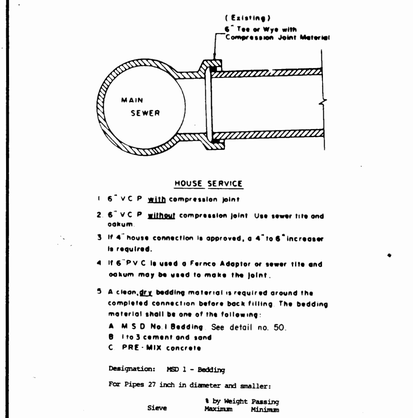

Sieve	% by Weight Passing Maximum	Minimum
1 inch	100	100
3/4 inch	100	90
1/2 inch	60	35
# 100	10	0

HOUSE CONNECTION TO EXISTING TEE OR WYE

DETAIL 50

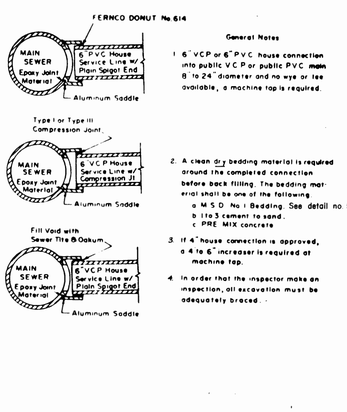

General Notes

1. 6" VCP or 6" PVC house connection into public VCP or public PVC main 8" to 24" diameter and no wye or tee available, a machine tap is required.

2. A clean dry bedding material is required around the completed connection before back filling. The bedding material shall be one of the following:
a M.S.D. No. 1 Bedding. See detail no. 50.
b 1 to 3 cement to sand.
c PRE MIX concrete

3. If 4" house connection is approved, a 4 to 6" increaser is required at machine tap.

4. In order that the inspector make an inspection, all excavation must be adequately braced.

MACHINE TAP

DETAIL 51

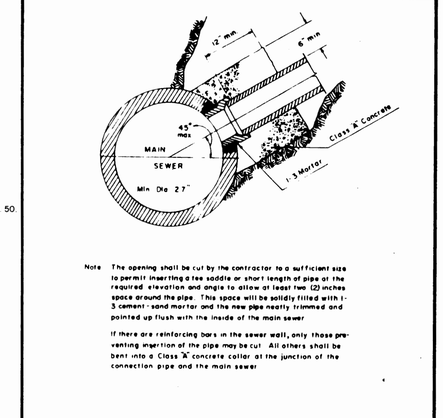

Note The opening shall be cut by the contractor to a sufficient size to permit inserting a tee saddle or short length of pipe at the required elevation and angle to allow at least two (2) inches space around the pipe. This space will be solidly filled with 1:3 cement - sand mortar and the new pipe neatly trimmed and pointed up flush with the inside of the main sewer.

If there are reinforcing bars in the sewer wall, only those preventing insertion of the pipe may be cut. All others shall be bent into a Class "A" concrete collar at the junction of the connection pipe and the main sewer.

HOUSE CONNECTIONS ALLOWED BY TEE SADDLE

DETAIL 52

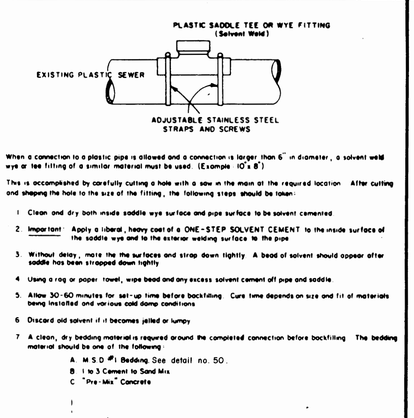

When a connection to a plastic pipe is allowed and a connection is larger than 6" in diameter, a solvent weld wye or tee fitting of a similar material must be used. (Example 10" x 8")

This is accomplished by carefully cutting a hole with a saw in the main at the required location. After cutting and shaping the hole to the size of the fitting, the following steps should be taken:

1. Clean and dry both inside saddle wye surface and pipe surface to be solvent cemented
2. Important: Apply a liberal, heavy coat of a ONE-STEP SOLVENT CEMENT to the inside surface of the saddle wye and to the exterior welding surface to the pipe
3. Without delay, mate the the surfaces and strap down tightly. A bead of solvent should appear after saddle has been strapped down tightly
4. Using a rag or paper towel, wipe bead and any excess solvent cement off pipe and saddle
5. Allow 30-60 minutes for set-up time before backfilling. Cure time depends on size and fit of materials being installed and various cold dome conditions
6. Discard old solvent if it becomes jelled or lumpy
7. A clean, dry bedding material is required around the completed connection before backfilling. The bedding material should be one of the following:
A. M.S.D. #1 Bedding. See detail no. 50.
B. 1 to 3 Cement to Sand Mix
C. "Pre-Mix" Concrete

8" (& LARGER) CONNECTION TO PLASTIC MAIN

DETAIL 53

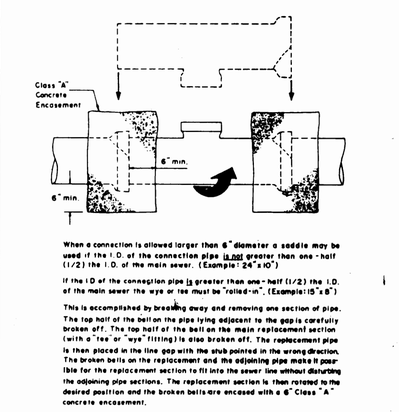

When a connection is allowed larger than 6" diameter a saddle may be used if the I.D. of the connection pipe is not greater than one-half (1/2) the I.D. of the main sewer. (Example: 24" x 10")

If the I.D. of the connection pipe is greater than one-half (1/2) the I.D. of the main sewer the wye or tee must be "rolled-in". (Example: 15" x 8")

This is accomplished by breaking away and removing one section of pipe. The top half of the bell on the pipe lying adjacent to the gap is carefully broken off. The top half of the bell on the main replacement section (with a "tee" or "wye" fitting) is also broken off. The replacement pipe is then placed in the line gap with the stub pointed in the wrong direction. The broken bells on the replacement and the adjoining pipe make it possible for the replacement section to fit into the sewer line without disturbing the adjoining pipe sections. The replacement section is then rotated to the desired position and the broken bells are encased with a 6" Class "A" concrete encasement.

"ROLL-IN" (FOR EXISTING CLAY OR CONCRETE PIPE)

DETAIL 54

NOT APPROVED FOR CONSTRUCTION City of O'Fallon, Mo.