NOTES:
1. WHERE SINGLE CURTAIN OF REINFORCING OCCURS, BEND BARS AS SHOWN FOR OUTSIDE BARS.
2. FOR MORE THAN 2 BARS PER LAYER, EXTEND INNER BARS 12" INTO PERPENDICULAR FOOTING. OUTER BARS SHALL BE PLACED AS INDICATED.
3. CORNER BARS TO MATCH WALL REINFORCEMENT.

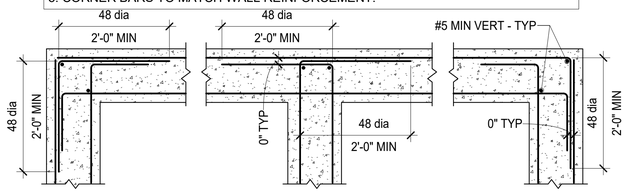

PLAN OF ALT CORNER **PLAN OF INTERSECTION** **PLAN OF TYPICAL CORNER**

1 / S1.2 FDN - TYP CONCRETE WALL REINFORCEMENT
N.T.S.

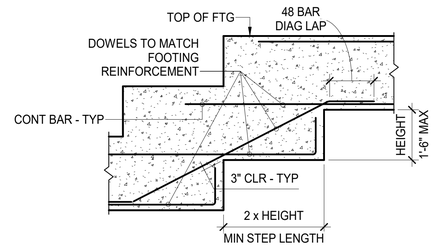

2 / S1.2 FDN - TYP FOOTING STEP
N.T.S.

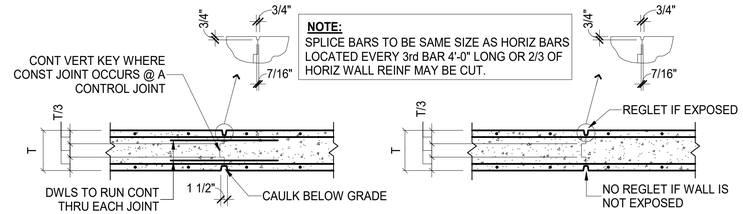

NOTE:
SPLICE BARS TO BE SAME SIZE AS HORIZ BARS LOCATED EVERY 3rd BAR 4'-0" LONG OR 2/3 OF HORIZ WALL REINF MAY BE CUT.

NOTE:
(25'-0"oc MAX. SPACING) APPROVED BY OWNER/ARCHITECT/ENGINEER

NOTE:
LOCATION TO BE BY CONTRACTOR

WALL CONTROL JOINT **WALL CONSTRUCTION JOINT**

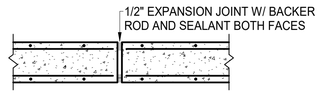

NOTE:
LOCATION PER PLAN

WALL EXPANSION JOINT

3 / S1.2 FDN - TYP WALL CONTROL JOINT / CONSTRUCTION JOINT / EXPANSION JOINT
N.T.S.

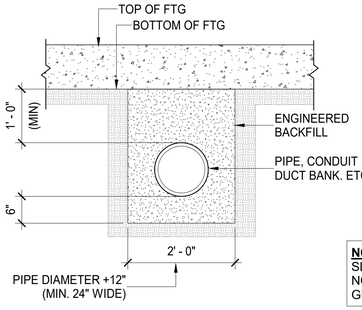

BELOW BOTTOM OF FOOTING

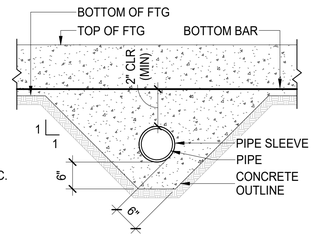

NOTE:
SLEEVE I.D. 2" LARGER THAN O.D. TYPICAL UNLESS NOTED OTHERWISE. CAULK OR PROVIDE FLOWABLE GROUT w/COMPRESSIBLE WRAP AROUND PIPE.

CLOSE TO BOTTOM OF FOOTING

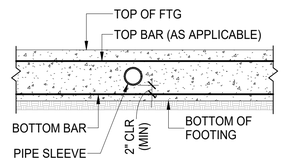

CLEAR OF TOP & BOTTOM BAR IN FOOTING OR FOUNDATION WALL (OR TRENCH FOOTING/GRADE BM.)

4 / S1.2 FDN - TYPICAL FOUNDATION PIPE PENETRATION DETAILS
N.T.S.

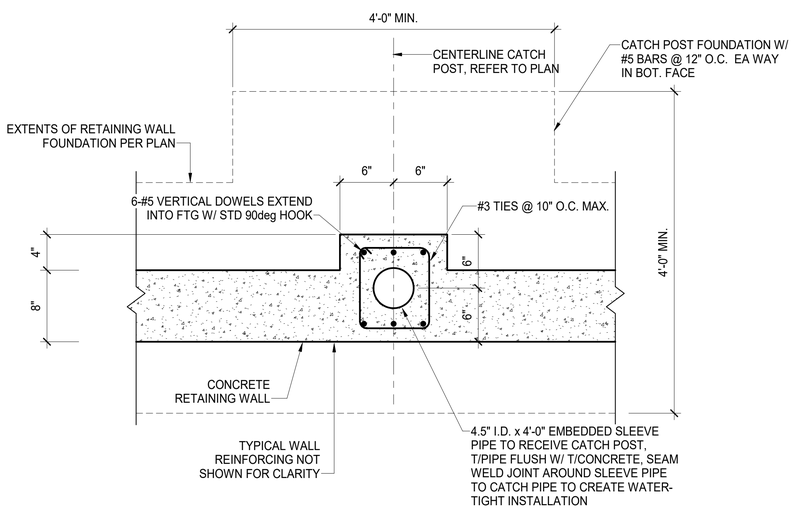

5 / S1.2 CATCH POST PILASTER/FOOTING DETAIL
N.T.S.

Ædifica case engineering
St. Louis - Montreal
mechanical
electrical
plumbing
fire protection
structural
796 Menas Court
St. Louis, MO 63026
T 636. 349.1600
F 636. 349.1730
edificacase.com
CERTIFICATE OF AUTHORITY NO. E-2000155319-D

STATE OF MISSOURI
STEPHEN J. SACCO
NUMBER PE-21871
6/21/17
PROFESSIONAL ENGINEER
STEPHEN SACCO
E-21871

MISSOURI RUSH
SOCCER CLUB
4160 Ehlmann Rd
St. Peters, MO 63376

MISSOURI RUSH
SOCCER PARK
RETAINING WALL
CALEDONIA DR.
O'FALLON, MO 63368

REVISIONS

No.	Description	Date

TYPICAL DETAILS

Project #	ZZMR-07-01-2017
Issue Date	6/21/2017
Drawn by	AEM
Checked by	SJS

S1.2

Scale As indicated