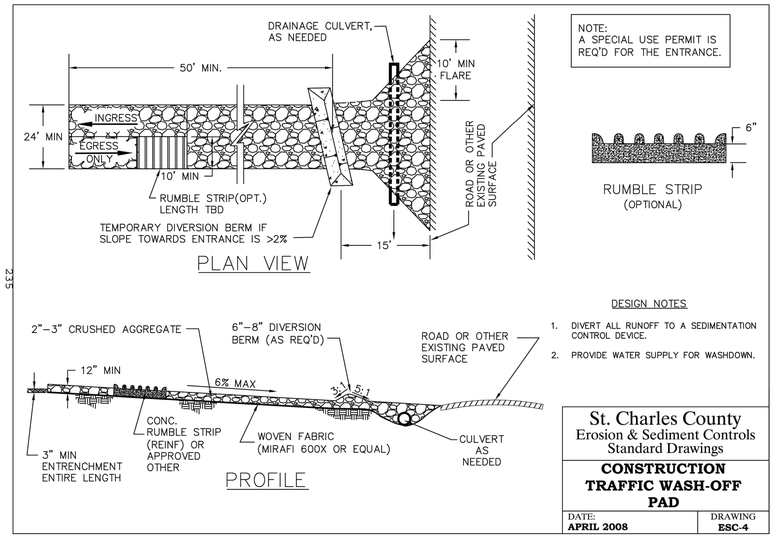

NOTE:
A SPECIAL USE PERMIT IS REQ'D FOR THE ENTRANCE.

DESIGN NOTES

1. DIVERT ALL RUNOFF TO A SEDIMENTATION CONTROL DEVICE.
2. PROVIDE WATER SUPPLY FOR WASHDOWN.

St. Charles County
Erosion & Sediment Controls
Standard Drawings

CONSTRUCTION TRAFFIC WASH-OFF PAD

DATE: **APRIL 2008** | DRAWING **ESC-4**

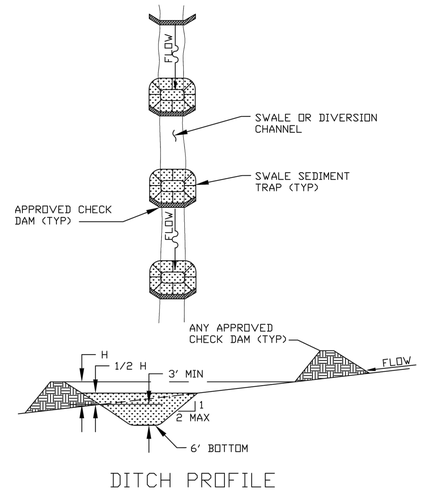

DESIGN CRITERIA

1. SEDIMENTATION TRAPS TO BE USED IN HIGHLY EROSIVE OR STEEP AREAS.
2. SEDIMENT TRAPS ARE TO BE USED IN CONJUNCTION WITH ANY APPROVED CHECK DAM OR DIVERSION CHANNEL SYSTEM, EXCEPT STRAW BALES.
3. STRAW BALE CHECK DAMS SHALL NOT BE USED IN THIS APPLICATION.
4. SEE ESC 1 FOR CHECK DAM SPACING WITH TRAP. MAXIMUM CHANNEL SLOPE 9%.

St. Charles County
Erosion & Sediment Controls
Standard Drawings

SWALE SEDIMENT TRAP

DATE: **APRIL 2008** | DRAWING **ESC-13**

Table 60-9 Mulching Materials

Material	Rate	Requirements	Installation/Uses
Straw	1.5-2.5 tons/ac (3-4 tons, if roller punched)	Dry, unchopped, unweathered; free of weed seeds & rot.	Spread by machine 1.5-2.5 inches deep; must be tacked or tied down.
Compost Blanket	1" thick	Double the application rate for embankments	Follow manufacturer's application method.
Wood fiber, wood cellulose, paper	1-2 tons/ac	Double the application rate in critical areas	Use with power mulcher or hydroseeder; may be used to tack straw on steep slopes. Cannot be used in hot dry weather.

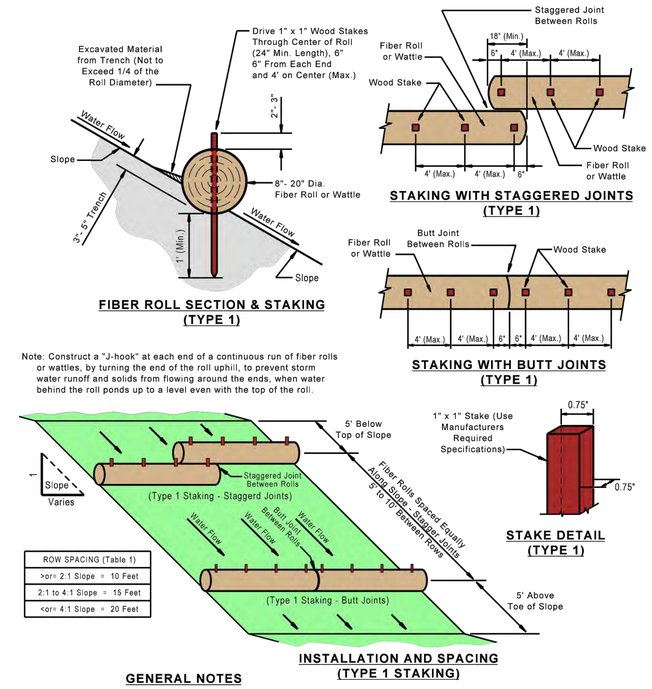

ROW SPACING (Table 1)
>or= 2:1 Slope = 10 Feet
2:1 to 4:1 Slope = 15 Feet
<or= 4:1 Slope = 20 Feet

Note: Construct a "J-hook" at each end of a continuous run of fiber rolls or wattles, by turning the end of the roll uphill, to prevent storm water runoff and solids from flowing around the ends, when water behind the roll ponds up to a level even with the top of the roll.

GENERAL NOTES

1) Do not scale drawing, follow dimensions.
2) Row spacing for slope installations should be determined by site conditions such as slope gradient and soil type (see Table 1 for row spacing).
3) Installations as shown above are designed for slopes of 1:10 and steeper.
4) Netting, filter sock or outer cover of rolls must be constructed of photodegradable or biodegradable material.
5) Fiber Rolls and Wattles shall contain straw, flax, coconut fiber (coir), rice straw or aspen excelsior, in a tight tubular roll, specifically designed for removal of solids from storm water runoff. Fill material must be biodegradable and contain no chemical additives.
6) Fiber Rolls or Wattles may be weighted for use around street inlets (internal roll weight or by placing a weight, such as a concrete block, on the down stream side of the roll). Weight must not be placed on top of the roll, smashing or flattening the roll.
7) Follow the roll manufacturers instructions and recommendations for the sizing, installation and maintenance of all Fiber Rolls or Wattles.

STRAW WATTLE DETAIL

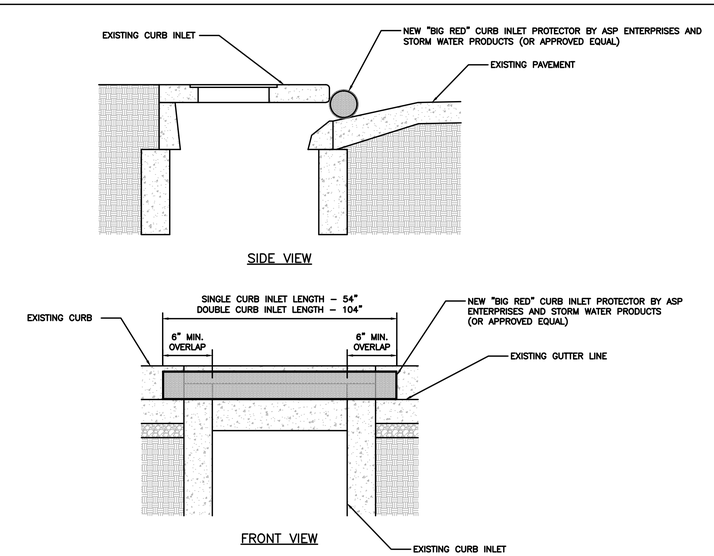

DETAIL NOTES:
1. CURB INLET PROTECTOR SHALL BE PLACED IN FRONT OF THE CURB INLET LAYING IN THE CONTOUR WITH A MINIMUM 6" OVERLAP PAST THE EDGE OF THE INLET MOUTH.
2. CURB INLET PROTECTOR SHALL BE INSTALLED AND MAINTAINED PER MANUFACTURER'S SPECIFICATIONS.

"BIG RED" CURB INLET PROTECTION (BR)

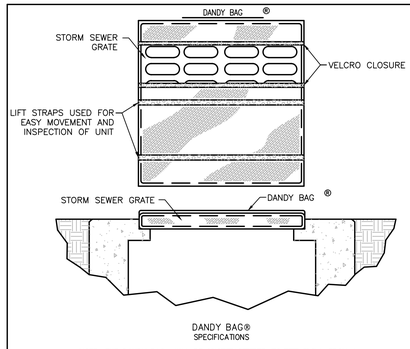

NOTE: THE DANDY BAG® WILL BE **MANUFACTURED IN THE U.S.A.** FROM A WOVEN MONOFILAMENT FABRIC THAT MEETS OR EXCEEDS THE FOLLOWING SPECIFICATIONS:

HI-FLOW DANDY BAG® (SAFETY ORANGE)

Mechanical Properties	Test Method	Units	MARV
Grab Tensile Strength	ASTM D 4632	kN (lbs)	1.62 (365) X 0.89 (200)
Grab Tensile Elongation	ASTM D 4632	%	24 X 10
Puncture Strength	ASTM D 4833	kN (lbs)	0.40 (90)
Mullen Burst Strength	ASTM D 3786	kPa (psi)	3097 (450)
Trapezoid Tear Strength	ASTM D 4533	kN (lbs)	0.51 (115) X 0.33 (75)
UV Resistance	ASTM D 4355	%	90
Apparent Opening Size	ASTM D 4751	Mm (US Std Sieve)	0.425 (40)
Flow Rate	ASTM D 4491	$l/min/m^2$ ($gal/min/ft^2$)	5907 (145)
Permittivity	ASTM D 4491	Sec^{-1}	2.1

*Note: All Dandy Bags® can be ordered with our optional oil absorbent pillows

R7-8, 12" X 18"
(PER MUTCD, LATEST EDITION)

DANDY BAG INLET PROTECTION DETAIL

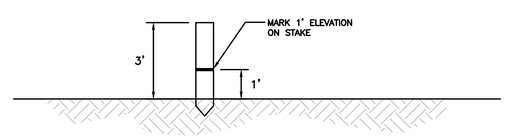

CLEANOUT ELEVATION STAKE DETAIL

CULVERT INLET SEDIMENT TRAP VOLUME CALCULATIONS

Elevation (ft)	Height (ft)	Area (ft^2)	Volume: Incremental (ft^3)	Volume: Cumulative (ft^3)	Volume: Incremental (ac-ft)	Volume: Cumulative (ac-ft)
546.75		2018				
	0.25		517	517	0.01	0.01
547.00		2117				
	1.00		2448	2965	0.06	0.07
548.00		2795				
	1.00		3160	6125	0.07	0.14
549.00		3540				
	1.00		4202	10327	0.10	0.24
550.00		4900				

DATE	NO	REVISION DESCRIPTION
6/20/17	4	CLIENT/CITY/AGENCY COMMENTS
6/13/17	3	PRIVATE WATER REVISION
6/09/17	2	REVISED DANDY BAG INSTALLATION
6/02/17	1	CLIENT/CITY/AGENCY COMMENTS

DEVELOPER/OWNER:
40 DD SPORTS, LLC
4160 EHLMANN ROAD
ST. PETERS, MO 63376
636-359-0521

THE PROFESSIONAL WHOSE SIGNATURE AND PERSONAL SEAL APPEAR HEREON ASSUMES RESPONSIBILITY ONLY FOR WHAT APPEARS ON THIS PAGE, AND DISCLAIMS RESPONSIBILITY FOR WORK SHOWN ON OTHER PAGES OF THIS PLAN SET. REPORTS, SPECIFICATIONS, ESTIMATES, REPORTS, OR OTHER DOCUMENTS OR INSTRUMENTS NOT SEALED BY THE UNDERSIGNED PROFESSIONAL RELATING TO, OR INTENDED TO BE USED WITH THIS PROJECT, ARE NOT PART OF THE PROJECT TO WHICH THIS PAGE REFERS.

SEAL:
STATE OF MISSOURI
ERIC W. MOHFF
NUMBER PE-2004020227
PROFESSIONAL ENGINEER
6/20/17

MISSOURI RUSH SOCCER COMPLEX
CALEDONIA DRIVE,
O'FALLON, MO 63366

EROSION CONTROL DETAILS

cole®
+ ST. LOUIS
401 S. 18th Street
Suite 200
St. Louis, MO 63103
314.984.9887 tel
www.colestl.com
CIVIL ENGINEERING / SURVEYING / PLANNING / LANDSCAPE ARCHITECTURE
Cole & Associates, Inc. is a Missouri Corporation d.b.a. Cole Design Group, Inc. A license to "Cole" signifies a "Cole"

DESIGN/CALC BY: BSJ
DRAWN BY: BSJ
CHECKED BY: EWM
DRAWING SCALE: AS SHOWN
DATE: 4/28/17
Job Number: 16-0042-A
Sheet Number: C9.5

USER: Brian Jokerst TAB: Erosion 1 (2)
DATE: June 20, 2017 – 10:57:39 AM
DRAWING: S:\JOBS\Jobs2016\16-0042\CADD_C-Plan\ProjSheets\C_PLAN_EROSION CONTROL DETAILS_16-0042.dwg