MONTICELLO - VILLAGE A
CONSTRUCTION DETAILS
February, 1992 85-064U

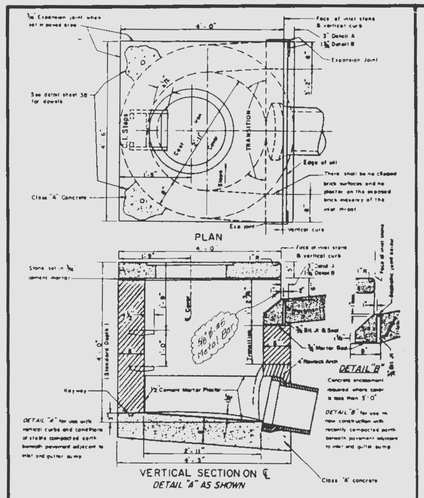

UNTRAPPED STREET INLET
BRICK CONSTRUCTION

DETAIL 19

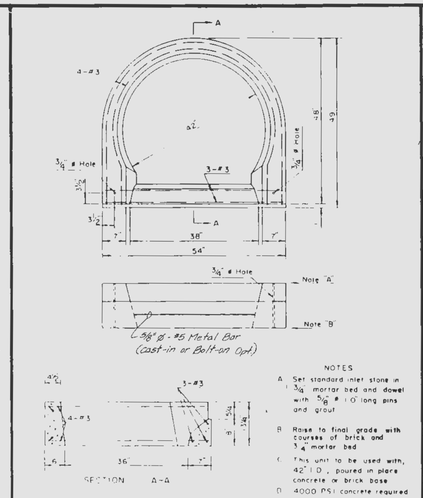

NOTES
A. Set standard inlet stone in 3/4" mortar bed and dowel with 5/8" ø 1'-0" long pins and grout
B. Raise to final grade with courses of brick and 3/4" mortar bed
C. This unit to be used with, 42" I.D., poured in place concrete or brick base
D. 4000 PSI concrete required

PRE-CAST CONCRETE UNIT
FOR
SINGLE CURB INLET

DETAIL 20

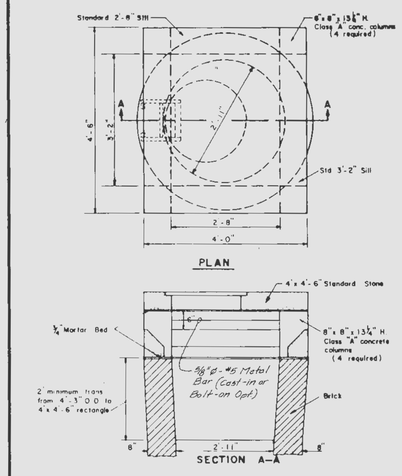

BRICK AREA INLET
OPEN 4 SIDES

DETAIL 21

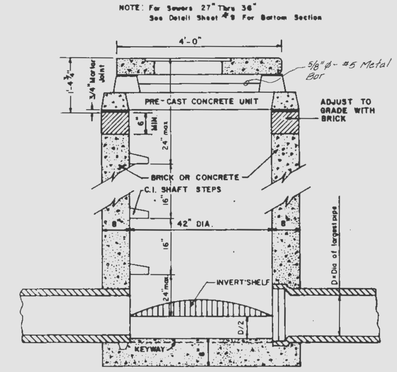

AREA INLET
(12" thru 24")

DETAIL 22

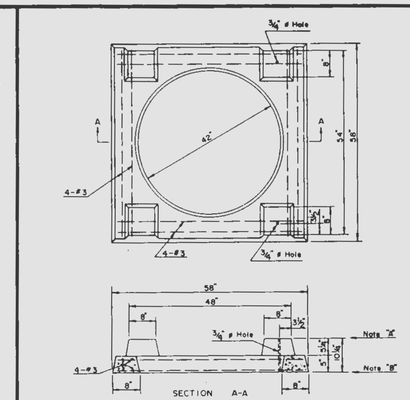

4000 P.S.I. concrete required.

NOTES
A. Set standard inlet stone in 3/4" mortar bed and dowel with 5/8" ø 1'-0" long pins and grout.
B. Raise to final grade with courses of brick & set the unit to base with 3/4" mortar bed.
C. This unit to be used with, 42" I.D., poured in place concrete or brick base.

PRE-CAST CONCRETE UNIT
FOR
4 WAY AREA INLET

DETAIL 23

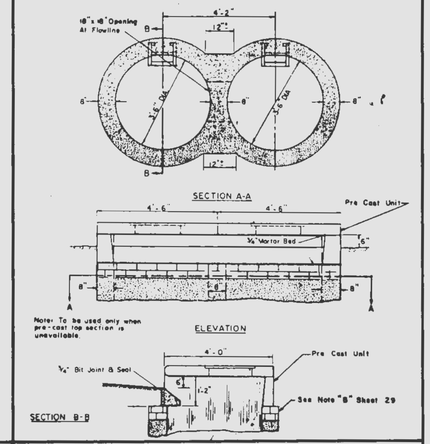

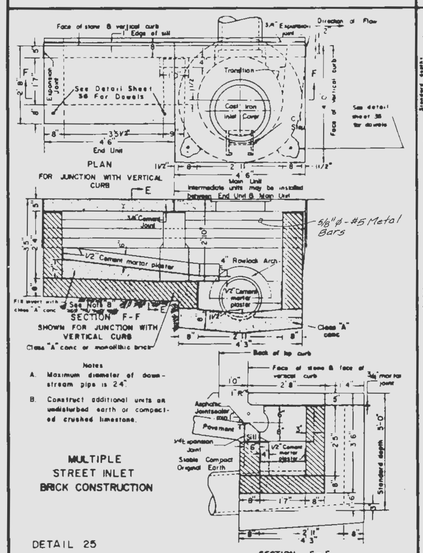

MULTIPLE
STREET INLET
BRICK CONSTRUCTION

DETAIL 25

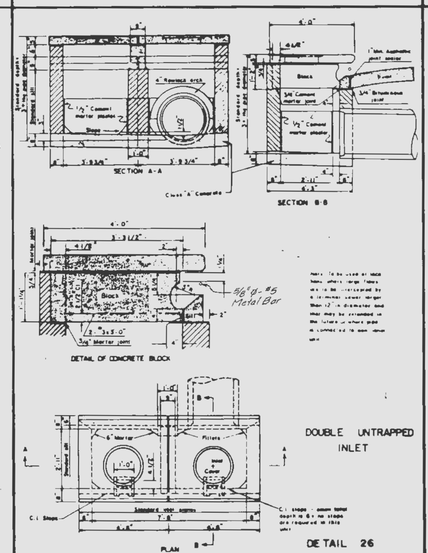

DOUBLE UNTRAPPED
INLET

DETAIL 26

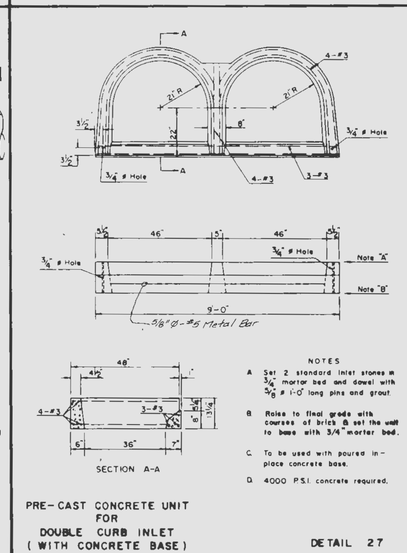

NOTES
A. Set 2 standard inlet stones in 3/4" mortar bed and dowel with 5/8" ø 1'-0" long pins and grout.
B. Raise to final grade with courses of brick & set the unit to base with 3/4" mortar bed.
C. To be used with poured in-place concrete base.
D. 4000 P.S.I. concrete required.

PRE-CAST CONCRETE UNIT
FOR
DOUBLE CURB INLET
(WITH CONCRETE BASE)

DETAIL 27

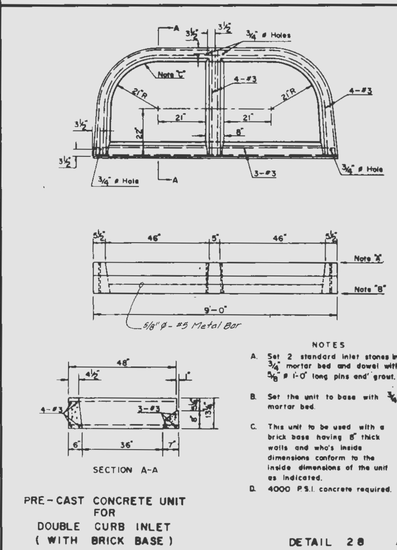

NOTES
A. Set 2 standard inlet stones in 3/4" mortar bed and dowel with 5/8" ø 1'-0" long pins and grout.
B. Set the unit to base with 3/4" mortar bed.
C. This unit to be used with a brick base having 8" thick walls and who's inside dimensions conform to the inside dimensions of the unit as indicated.
D. 4000 P.S.I. concrete required.

PRE-CAST CONCRETE UNIT
FOR
DOUBLE CURB INLET
(WITH BRICK BASE)

DETAIL 28

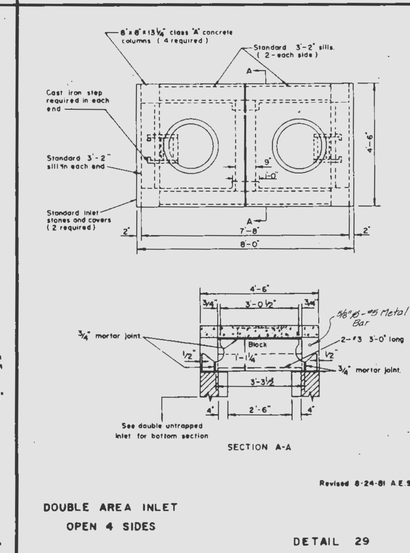

DOUBLE AREA INLET
OPEN 4 SIDES

DETAIL 29

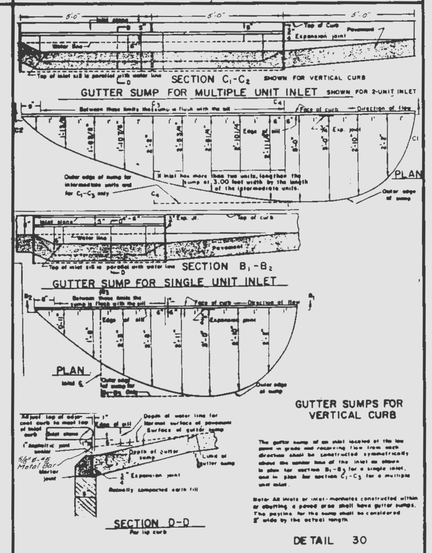

DETAIL 30

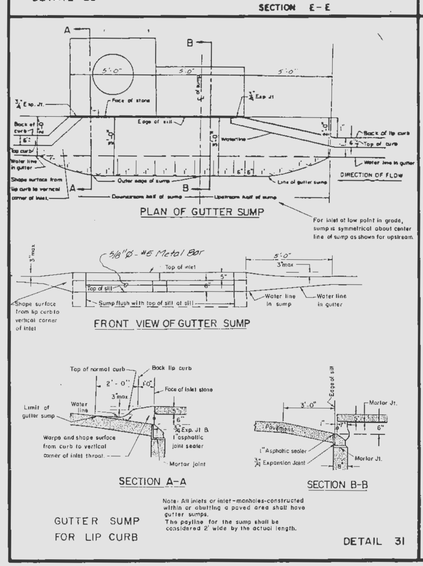

GUTTER SUMP
FOR LIP CURB

DETAIL 31

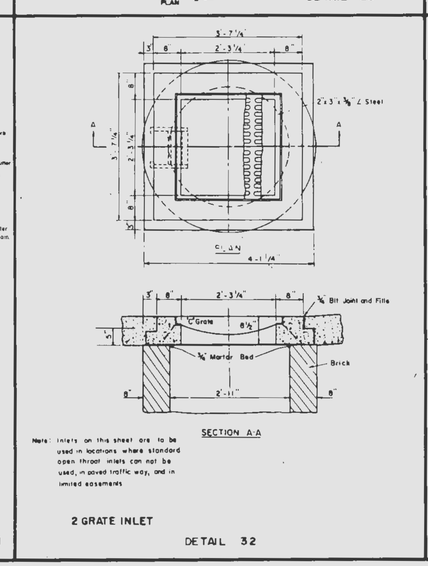

Note: Inlets on this sheet are to be used in locations where standard open throat inlets can not be used, in paved traffic way, and in limited easements

2 GRATE INLET

DETAIL 32

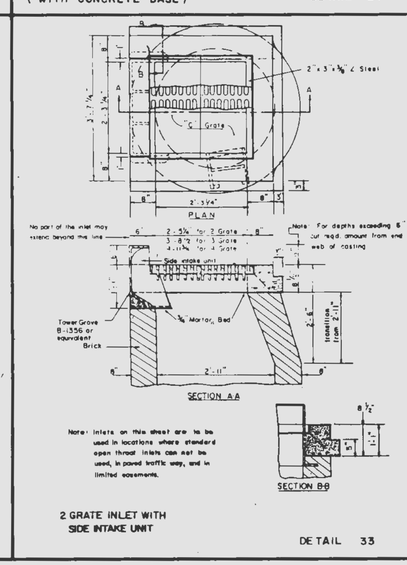

Note: Inlets on this sheet are to be used in locations where standard open throat inlets can not be used, in paved traffic way, and in limited easements.

2 GRATE INLET WITH
SIDE INTAKE UNIT

DETAIL 33

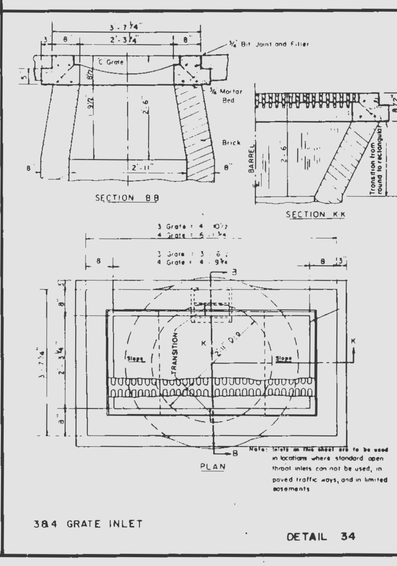

Note: Inlets on this sheet are to be used in locations where standard open throat inlets can not be used, in paved traffic ways, and in limited easements

3&4 GRATE INLET

DETAIL 34

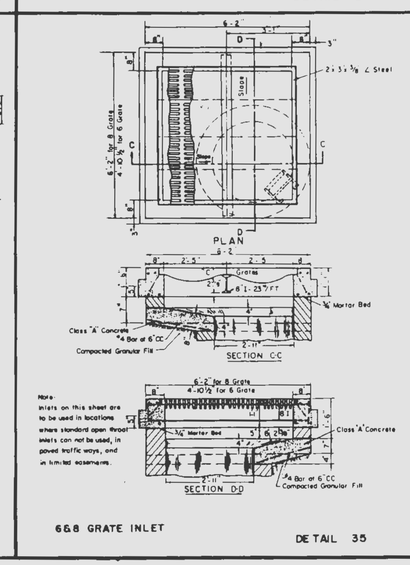

Note:
Inlets on this sheet are to be used in locations where standard open throat inlets can not be used, in paved traffic ways, and in limited easements.

6&8 GRATE INLET

DETAIL 35

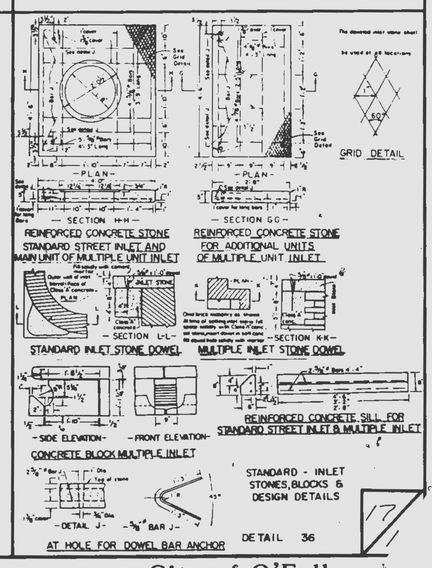

STANDARD - INLET
STONES, BLOCKS &
DESIGN DETAILS

DETAIL 36

City of O'Fallon,