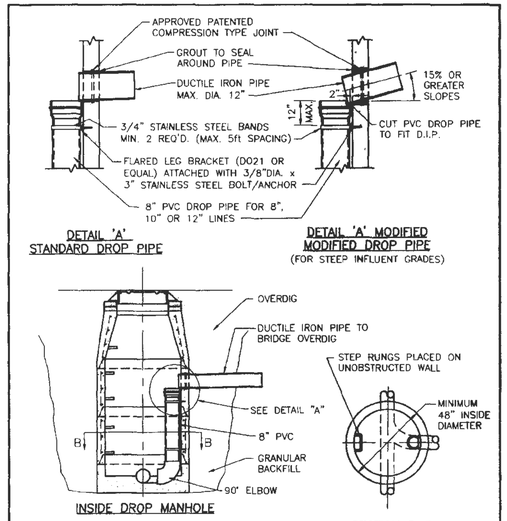

NOTE:
ALL INVERTS SHALL HAVE POSITIVE DRAINAGE THROUGH MANHOLE.

Duckett Creek Sanitary District

INSIDE DROP MANHOLE	Dwn By: BSM	App By: KLA	Detail No. 10
	Ckd By: MDOB	Date: 01-10-00	

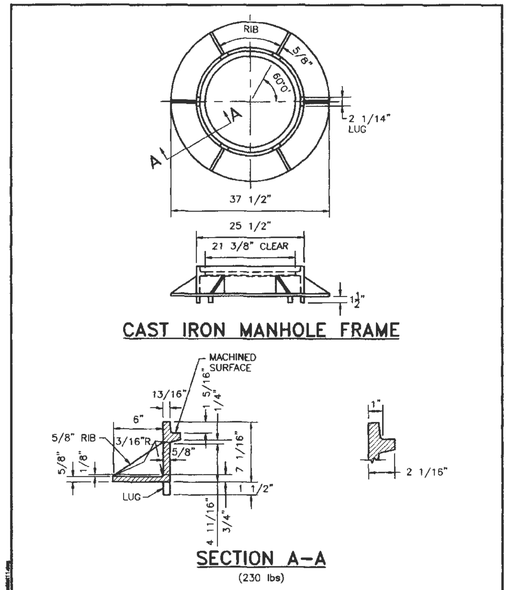

Duckett Creek Sanitary District

CAST IRON MANHOLE FRAME	Dwn By: BSM	App By: KLA	Detail No. 11
	Ckd By: MDOB	Date: 01-14-00	

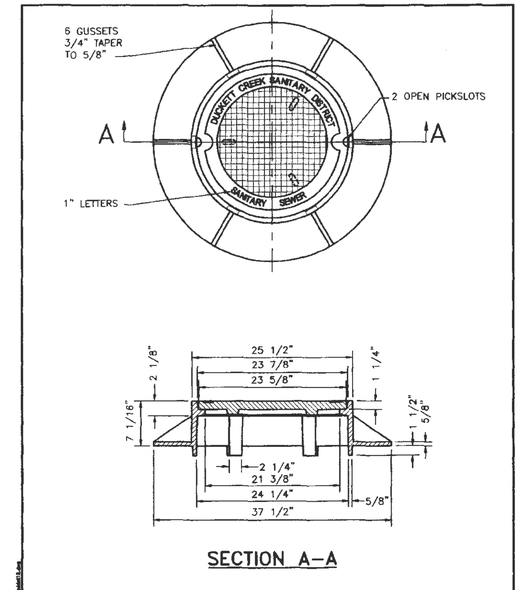

Duckett Creek Sanitary District

MANHOLE FRAME AND COVER	Dwn By: BSM	App By: KLA	Detail No. 12
	Ckd By: MDOB	Date: 01-14-00	

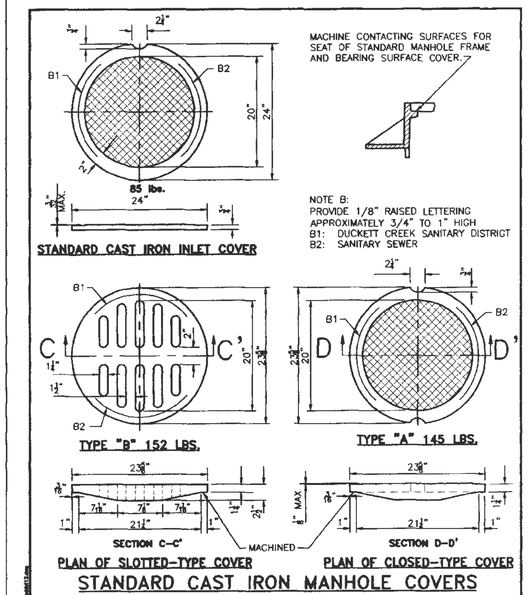

STANDARD CAST IRON MANHOLE COVERS

Duckett Creek Sanitary District

CAST IRON COVERS MANHOLES AND INLETS	Dwn By: BSM	App By: KLA	Detail No. 13
	Ckd By: MDOB	Date: 12-22-00	

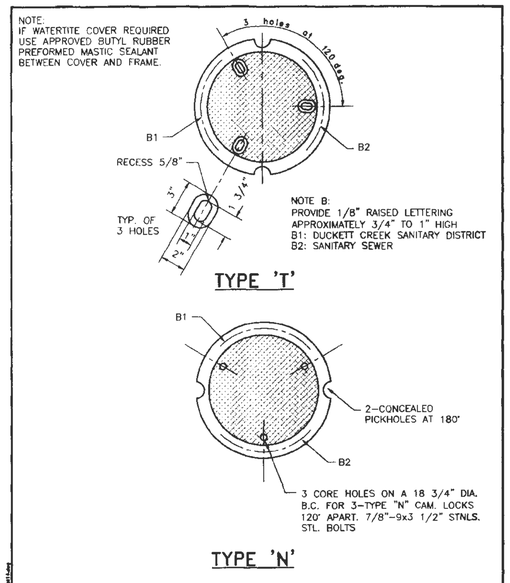

Duckett Creek Sanitary District

CAST IRON MANHOLE COVERS (LOCK TYPE)	Dwn By: BSM	App By: KLA	Detail No. 14
	Ckd By: MDOB	Date: 12-27-00	

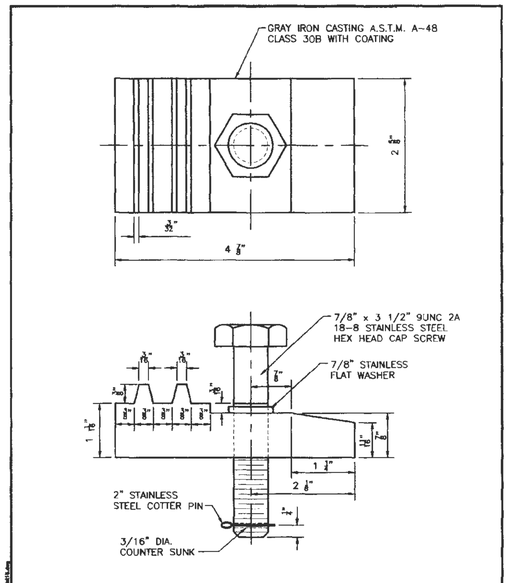

Duckett Creek Sanitary District

LOCKING DEVICE FOR TYPE "T" LOCK TYPE MANHOLE COVER	Dwn By: BSM	App By: KLA	Detail No. 15
	Ckd By: MDOB	Date: 12-27-00	

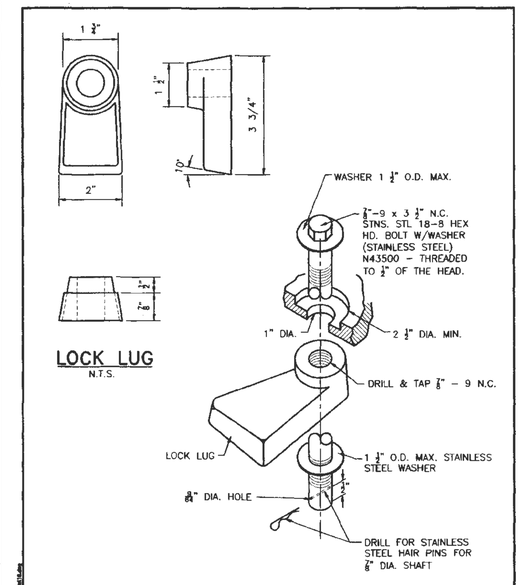

Duckett Creek Sanitary District

LOCKING DEVICE FOR TYPE "N" LOCK TYPE MANHOLE COVER	Dwn By: BSM	App By: KLA	Detail No. 16
	Ckd By: MDOB	Date: 12-28-00	

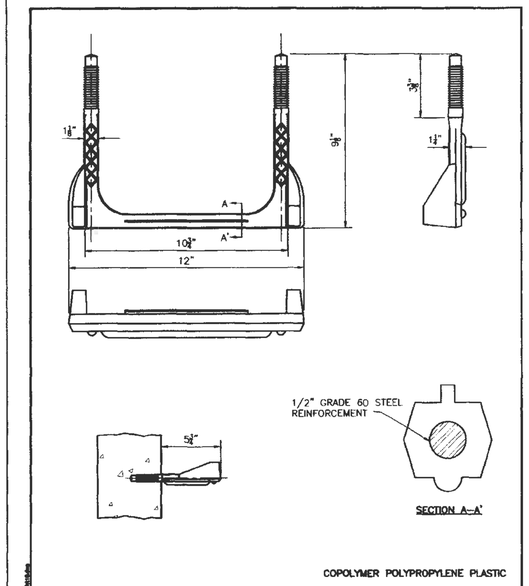

Duckett Creek Sanitary District

MANHOLE STEP PRECAST MANHOLE	Dwn By: BSM	App By: KLA	Detail No. 18
	Ckd By: MDOB	Date: 1-3-01	

City of O'Fallon Standard Subdivision Notes and Details - June 2010

PROJECT TITLE
MUIRFIELD MANOR
PRS No. 13033.MCHO.00R

PICKETT, RAY & SILVER INC
CIVIL ENGINEERING, LAND SURVEYING, AND NATURAL RESOURCES SERVICES
St. Peters: 22 Richmond Center Court, St. Peters, MO 63376
Branson: 110 West Adams, Suite 201, Branson, Mo 65616
Phone (636) 397-1211 Fax (636) 397-1104
www.prs3.com 1-800-708-3918

ENGINEERS AUTHENTICATION
THE RESPONSIBILITY FOR PROFESSIONAL ENGINEERING LIABILITY ON THIS PROJECT IS HEREBY LIMITED TO THE SET OF PLANS AUTHENTICATED BY THE SEAL, SIGNATURE, AND DATE HEREUNDER ATTACHED. RESPONSIBILITY IS DISCLAIMED FOR ALL OTHER ENGINEERING PLANS INVOLVED IN THIS PROJECT AND SPECIFICALLY EXCLUDES REVISIONS AFTER THIS DATE UNLESS REAUTHENTICATED.

PICKETT, RAY & SILVER, INC.
MO LICENSE #000325

1/29/14

DOUGLAS S. TIEMANN
PROFESSIONAL ENGINEER LICENSE E-22345

Developer / Owner Information

McKELVEY HOMES
218 Chesterfield Towne Centre
Chesterfield, Missouri 63005
Phone: 636-530-6900

CITY OF O'FALLON - Duckett Creek Sanitary District Details

P+Z No.

City No.

Page No.
22 of 27

\\PRS-SBS2011\Projects\Civil 3D Projects\13033\DWG\Water & Sanitary Details.dwg 12/22/2015 2:17:19 PM, ddanson