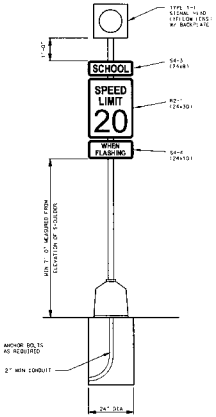

STANDARD FLASHING SCHOOL BEACON

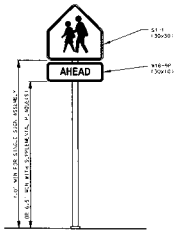

STANDARD SIGN MOUNTING

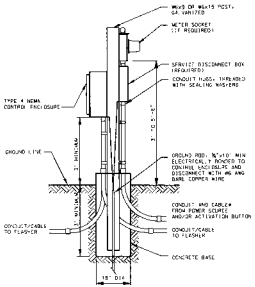

* IF POWER SOURCE IS THE UTILITY COMPANY, MINIMUM 2" RIGID STEEL CONDUIT

CONTROL PEDESTAL FOR ADVANCED FLASHER

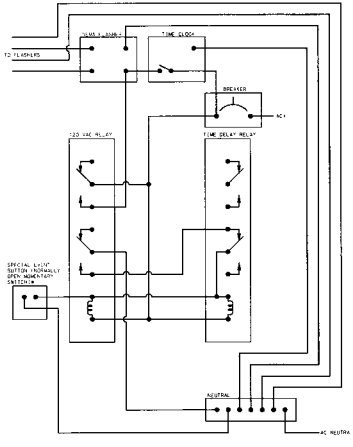

RELAYS - 8 PIN DC12, BASE MOUNT, MINIMUM 5 AMP CONTACTS
TIME DELAY RELAY - SSAC INC. T-D 120VAC OR EQUIVALENT
ALL WIRING SHALL BE #12 AWG MINIMUM
BREAKER - 15 AMP
TIME CLOCK - SHALL CONFORM TO APPROVED STANDARD
SPECIFICATIONS AND "THE APPROVED PRODUCTS LIST"
A SPECIAL EVENT BUTTON SHALL BE MOUNTED 3'-13'5"-6" ABOVE GROUND. THIS MAY REQUIRE A SEPARATE ENCLOSURE

STATE OF MISSOURI
GEORGE JOHN MURPHY
E-27731
PROFESSIONAL ENGINEER
12-05

PLAN	BY	DATE
REVISED: ALIGNMENT UNCHANGED, GRADE CHANGED, BY OF WAY CHANGED		
WYS BOOK NO.		

PROFILE	BY	DATE
REVISED: ALIGNMENT UNCHANGED, GRADE CHANGED, BOTH ALIGNMENT & GRADE CHANGED		
WYS BOOK NO.		

PLOT DATA
PAPER SIZE: E
DATE PLOTTED:
SCALE: 1=30