ST. CHARLES COUNTY PROJ. NO.:	SHEET NUMBER	TOTAL SHEETS
O'FALLON ROAD	93	114
FEDERAL PROJECT NO. STP-5640(606)		

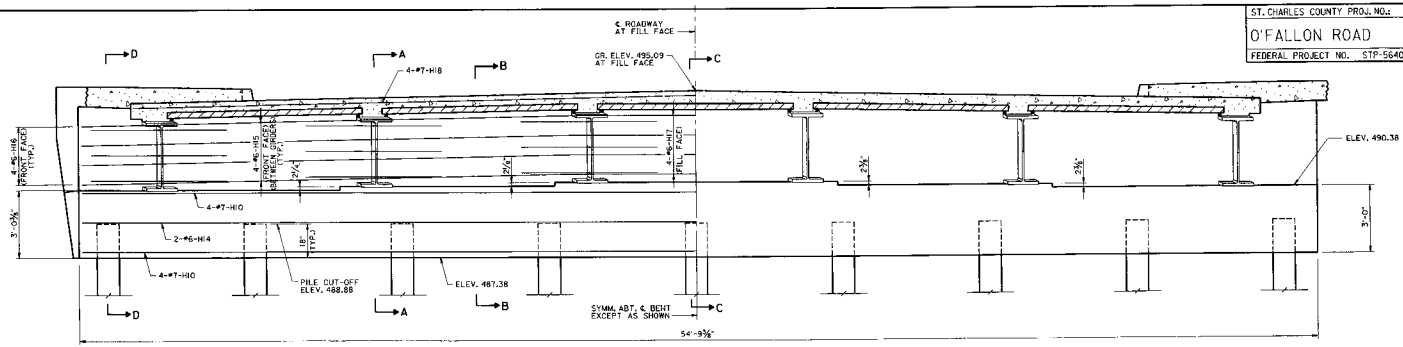

SECTION NEAR END BENT

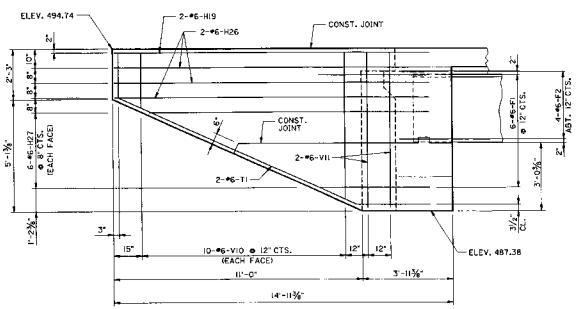

ELEVATION E-E

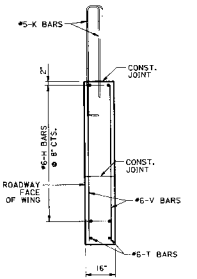

SECTION THRU WING

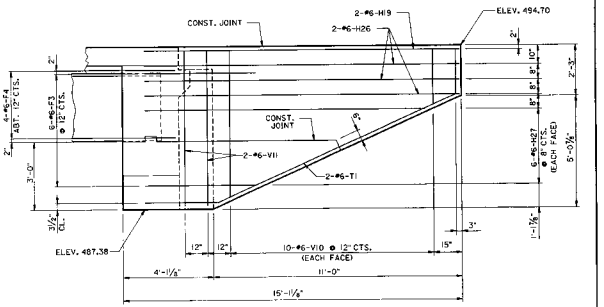

ELEVATION H-H

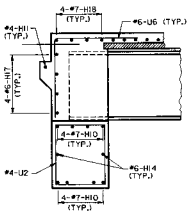

SECTION A-A

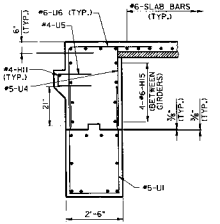

SECTION B-B

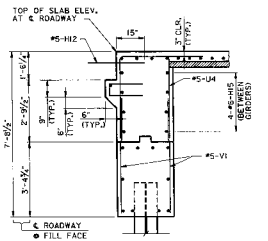

SECTION C-C

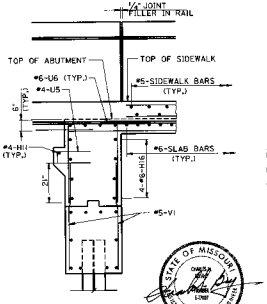

SECTION D-D

DETAILS OF END BENT NO. 1

SUBSTRUCTURE QUANTITY TABLE FOR END BENT NO. 1		
ITEM		QUANTITY
CLASS 1 EXCAVATION	CU. YD.	65
STRUCTURAL STEEL PILES (12")	LIN. FT.	216
CLASS B CONCRETE (SUBSTR.)	CU. YD.	20

ALL CONCRETE IN THE END BENT ABOVE TOP OF BEAM AND BELOW TOP OF SLAB SHALL BE CLASS B-2.

FOR LOCATION OF ELEVATIONS E-E AND H-H, SEE SHEET NO. 92.

FOR REINFORCEMENT OF THE SAFETY BARRIER CURB SEE SHEET NOS. 100 & 101.

BEND F1 BARS IN FIELD TO CLEAR GIRDERS.

ALL VERTICAL REINFORCING BARS IN THE SUPERSTRUCTURE BEAMS OR CAPS SHALL BE FIELD ADJUSTED TO CLEAR PILES BY AT LEAST 1½".

WHEN POURING WINGWALLS, PROVISIONS SHALL BE MADE FOR SETTING REINFORCING STEEL FOR THE BARRIER RAIL.

STATE OF MISSOURI
CHARLES A. LUNDE
NUMBER 32302
REGISTERED PROFESSIONAL ENGINEER
01 Dec 03

END BENT 1 DETAILS 2 OF 2

PLAN — DATE — BY — REVISIONS — PROPERLY ENTERED — PLOTTED — PLOT DATA — PROFILE — DATE — BY — REVISIONS — REPORTED — CHECKED — PLOT DATA — PLOTTED BY — PLOTTED DATE — PLOT SCALE — 1:20